VAN'S AIRCRAFT
TOTAL PERFORMANCE

14401 Keil Road NE, Aurora, Oregon, USA 97002
www.vansaircraft.com • info@vansaircraft.com
PHONE 503-678-6545

SERVICE BULLETIN 00134 REV 2.2

Date Released:

10/12/26 – Rev 2.2 (Added reference to SB-00142 for RV-4 aircraft as an alternate means of attaching the horizontal stabilizer)

09/18/26 – Rev 2.2 (Added e/D values in inches, Added Figures 9 and 10, Updated Figure 4, Updated Step 3, Added AN3 bolt size note)

09/05/26 – Rev 2.1 (In Step 2 added inspection between the bolts, in Step 3C forward edge reference, other editorial changes)

09/03/26 – Rev 2 (In Step 3 expanded e/D allowable under certain conditions)

08/22/26 – Rev 1 (In Step 3 added an allowable e/D = 1.00 with stated conditions. Added note on original RV-4 before Step 1)

08/13/26 – Rev 0 (Initial Release)

Date Effective: 08/22/26

Subject: Horizontal Stabilizer Forward Attach Bolt Position

Affected Models: RV-4, RV-6/6A, RV-7/7A, RV-8/8A

Required Action: Inspect aircraft to determine if bolts positions are within the limits specified by this service document.

Time of Compliance: Within the next 10 flying hours or 90 days from the effective date of this service document whichever comes first.

Supersedes Notice: N/A

Labor Required / SLSA Warranty Allowance: N/A

Level of Certification: N/A

Synopsis:
The plans pages for the horizontal stabilizer attach specify the position of the horizontal stabilizer forward spar attach bolts. See Figure 2 and Figure 3. Some aircraft have been

constructed with these bolt holes significantly displaced from the given location. This has resulted in inquiries which have been dealt with on a case-by-case basis. This service document establishes the acceptable limits for the bolt locations. Contact Van's Aircraft for further guidance if an aircraft does not meet the criteria established in this document.

Materials Required:
If required a washer plate made from .125 thick 6061-T6 or 2024-T3 Aluminum.

Method of Compliance:

NOTE: Except where called out for simplicity the RV-7 will be shown throughout this document. Other aircraft will be similar in construction with relevant part numbers. Consult the instructions provided with your aircraft for further information.

NOTE: Some original RV-4 aircraft were built with a single bolt attaching the forward spar of the horizontal stabilizer on each side of the aircraft. These aircraft should be upgraded to meet the altered stabilizer attach as shown on KAI 30 Rev 1 Nov 1983 and as shown on all subsequent issues of the drawing. An alternate solution is shown in SB-00142. Aircraft with custom attach methods should contact Van's Aircraft for further assistance.

NOTE: This service bulletin assumes that AN3 bolts were used as called out in the kit assembly instructions and is not applicable to other bolt sizes. If other bolt sizes were used contact Van's Aircraft for further assistance.

Step 1: Remove the empennage fairing. Inspect the position of the bolts attaching the forward spar of the horizontal stabilizer to the fuselage. The bolts heads are visible looking from above. Also using a mirror and light source inspect the bottom side of the joint. If the bolt positions appear to be outside of the acceptable range defined by this document remove the front horizontal stabilizer bolts to make accurate measurements in the following steps.

The strength of this joint and the airframe structure as a whole is relatively tolerant of variations in the outermost bolt hole position in the fuselage longerons, even where this involves less than what are normally considered minimum edge distances, zero edge distance and even bolt holes cutting through the inner edge of the longeron flange. In the fuselage longeron, spanwise locations of the outermost bolt positions that result in the hole for the outboard bolt having a reduced edge margin in the longeron, cutting through the inboard edge of the longeron or missing the longeron altogether are acceptable. See Figure 1.

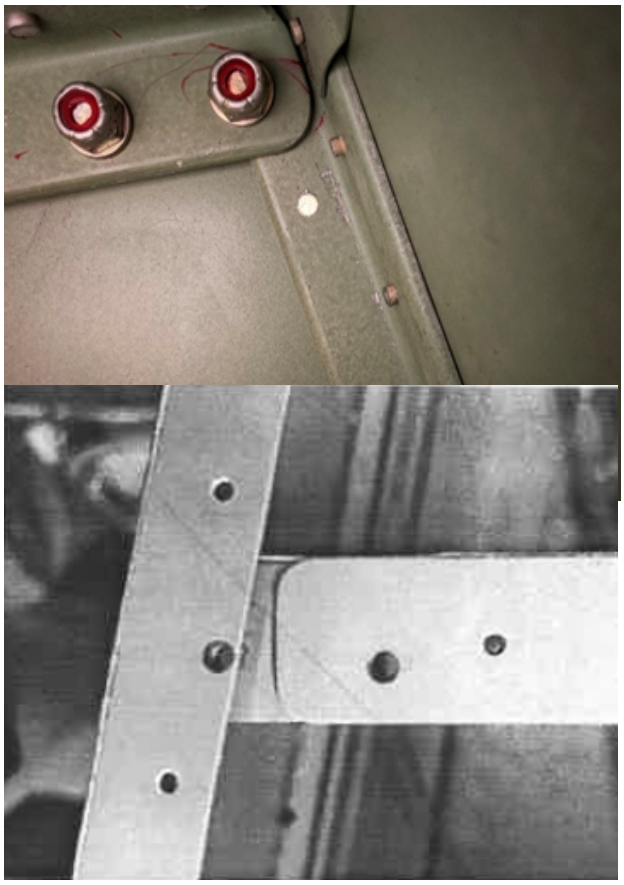

FIGURE 1: LONGERON REDUCED EDGE DISTANCE
(HORIZONTAL AND TOP DECK REMOVED)

NOTE: For the following steps, use the SB-00134 Compliance Flowchart as a reference.

Step 2: Measure the distance between the attach bolts on one side of the aircraft (see the set of bolts marked with arrows in Figure 2 with a distance of 27/32 inches between them). At minimum the distance between the bolts should be 25/32 inches.

A hole spacing less than 25/32 inches but not less than 1/2 inch is acceptable provided that the areas shown in Figure 6 and the areas between the bolts are carefully inspected at each annual or 100-hour intervals whichever comes first (the relief notch within the red box in the figure and the angle inside radius within the blue box). If the distance is less than 1/2 inch contact Van's Aircraft for further assistance.

Step 3: Edge Distances

Step 3A: Forward Edge Distance HS-714 and F-710B
Step 3A checks the edge distance to each bolt individually while Step 5 checks the average edge distance (the edge distance of the bolt centroid). Edge distances that comply with Step 3A may be found to fail to comply with the requirements in Step 5 if the bolt centroid is placed too far inboard.

Measure the edge distance between the center of each bolt hole and the forward edge of the HS-714 Attach Angle. Repeat the measurement for the forward edge of the F-710B Angle. See Figure 2 and Figure 3. The edge distance should not be less than e/D = 1.5 (e/D the distance from the center of a hole to the edge of the part divided by the diameter of the hole .190x1.5 = .28 in).

An edge distance less than e/D = 1.5 (.28 in) but not less than e/D = 1.0 (.19 in) is acceptable provided that the areas shown in Figure 6 are carefully inspected at each annual or 100-hour intervals whichever comes first (the relief notch within the red box in the figure and the angle inside radius within the blue box).

If the e/D is less than 1.0 (.19 in) contact Van's Aircraft for further assistance.

Step 3B: Outboard Edge Distance HS-714
Measure the edge distance between the center of the outboard most bolt holes and the outboard edge of the HS-714 Attach Angle. In no case may the edge distance be less than e/D = 1.5 (.28 in). If the e/D is less than 1.5 contact Van's Aircraft for further assistance.

An edge distance of less than 1.5 (.28 in) in this location is an indicator that the HS-714 horizontal flange was trimmed too far back. In some cases, a smaller edge distance may be permissible provided HS-714 was fabricated correctly. For this reason, we have asked that non-compliant aircraft contact Van's Aircraft for further guidance.

The inboard notch in HS-714 shall be a smooth radius as shown within the KAI with no stress risers (such as saw cuts or sharp corners). The inboard most edge of the notch shall not be more than .81 in inboard of the inboard most edge of the horizontal stabilizer skin.

The inboard edge of the horizontal stabilizer skin may have been relieved beneath the HS-714 angle in some installations. If this is the case ignore the relief and use the projected edge of the skin when measuring the distance above.

Some notches are excessive and have effectively formed a tab on which the outboard most attach bolt is positioned as shown in Figure 9. This is permissible if the inboard edge of the notch meets the criteria above.

Any trim condition inboard of the trim profile shown within KAI but not greater than the maximum depth and criteria stated above and shown in Figure 9 is acceptable provided that the area within the red box shown in Figure 6 is carefully inspected at each annual or 100-hour intervals whichever comes first.

Step 3C: Outboard Edge Distance F-710B
Check to ensure that the outboard end of F-710B is resting on the F-718 Longeron. Measure the edge distance between the center of the outboard most bolt holes and the outboard edge of the F-710B Angle. In no case may the edge distance be less than e/D = 1.33 (.190x1.33=.25) unless the following is true:

If the entire diameter of the outboard most bolt hole is within boundary of the main longeron (see Figure 5) and if the inboard bolt meets the criteria of Step 3A e/D=1.5 (.28 in) and Step 4 and Step 5 (below) then an edge distance e/D = .25 (.05 in) is acceptable.

If the e/D is less than those specified above or the outboard end of F-710B is not resting on the F-718 Longeron, contact Van's Aircraft for further assistance.

For e/D's less than .875 (.17 in) and equal to or greater than .25 (.05 in) a washer plate capturing both bolts shall be installed. See Figure 10. The plate shall be made from .125 thick 6061-T6 or 2024-T3 aluminum. The plate shall have at minimum an e/D = 1.0 (.19 in) spanwise edge distance for the outboard most bolt and maintain a 1.5 (.28 in) to 2 (.38 in) e/D elsewhere. The plate must rest in full contact with the flat area of F-710B ie not be held off by the fillet radius of the F-710B, rivet heads or other features.

Step 4: For the left and right sides of the aircraft, measure the distance from the center of the bolt pattern to the centerline of the aircraft.

For example, Figure 2 the center of the bolt pattern would be 4 1/16 inches plus half the distance between the bolts or half of 27/32 inches which results in a bolt pattern center distance to the centerline of 4.48 inches.

Step 5: Plot the average e/D value for the center of the bolt pattern and the forward edge of the HS-714 Attach Angle from Step 3 and the bolt pattern center distance to the centerline measured in Step 4. The plotted point must be outside the unacceptable region noted in Figure 4.

For example, the bolt pattern distance from Step 4 was 4.484 inches. Assume the nominal e/D of 2 (.38 in) of the center of the bolt pattern. This example corresponds to the RV-7 nominal point given on the chart in Figure 4. If the point on the chart is within the unacceptable area on the chart contact Van's Aircraft for further assistance.

Step 6: Make a logbook entry indicating compliance with this service document and any ongoing inspections from Step 3 if necessary, per the requirements of the controlling authority/agency.

If you are no longer in possession of this aircraft, please forward this information to the present owner/operator and immediately notify Van's Aircraft, Inc. via email at registrations@vansaircraft.com. Please include the new owner's contact information and date the aircraft ownership transferred.

Information regarding establishing/transferring aircraft ownership, registration and licensing is available at: https://www.vansaircraft.com/qr/transfer-of-ownership/

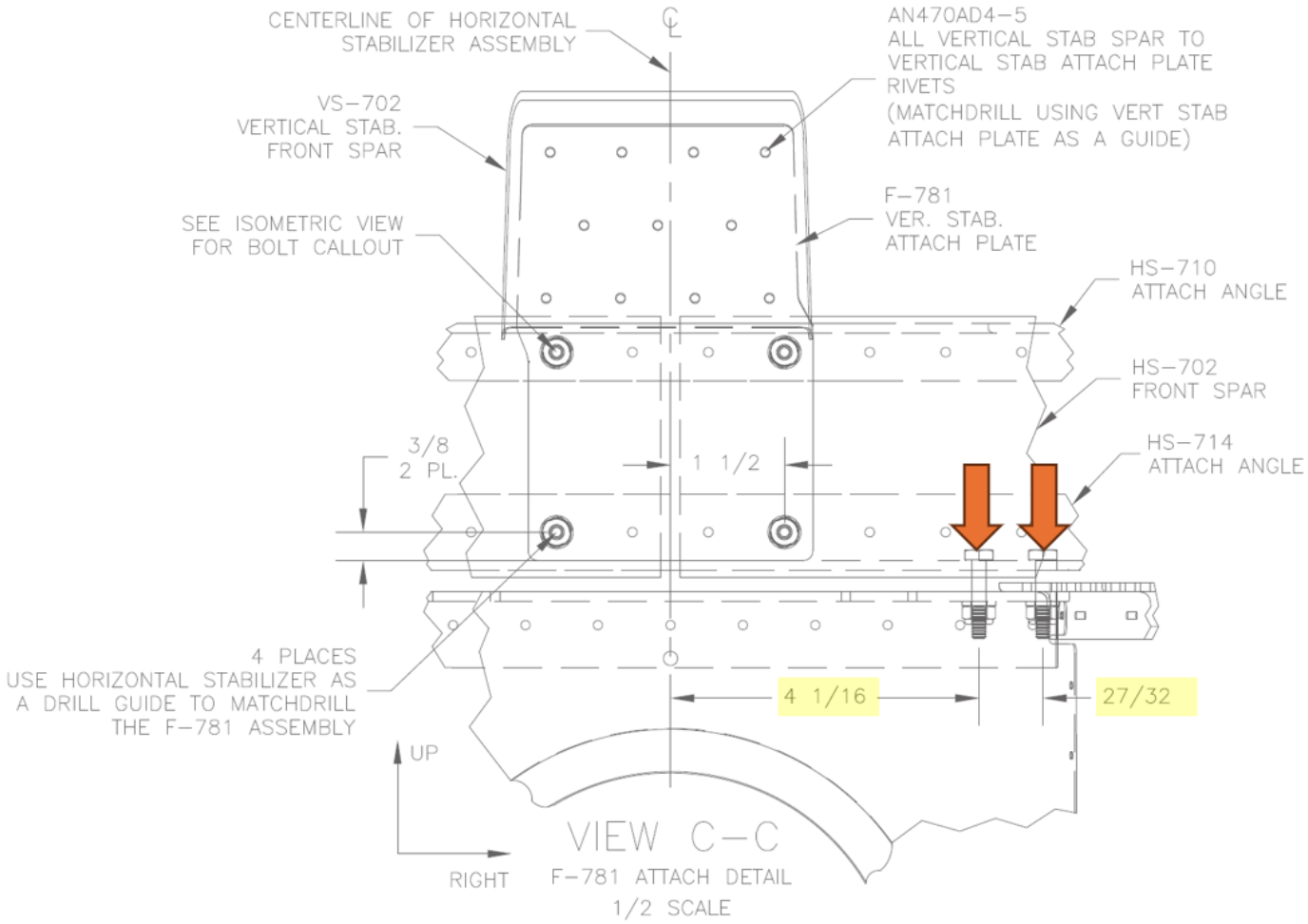

FIGURE 2: RV-7 DEG 27A TYPICAL HORIZONTAL STABILIZER ATTACH FRONT VIEW

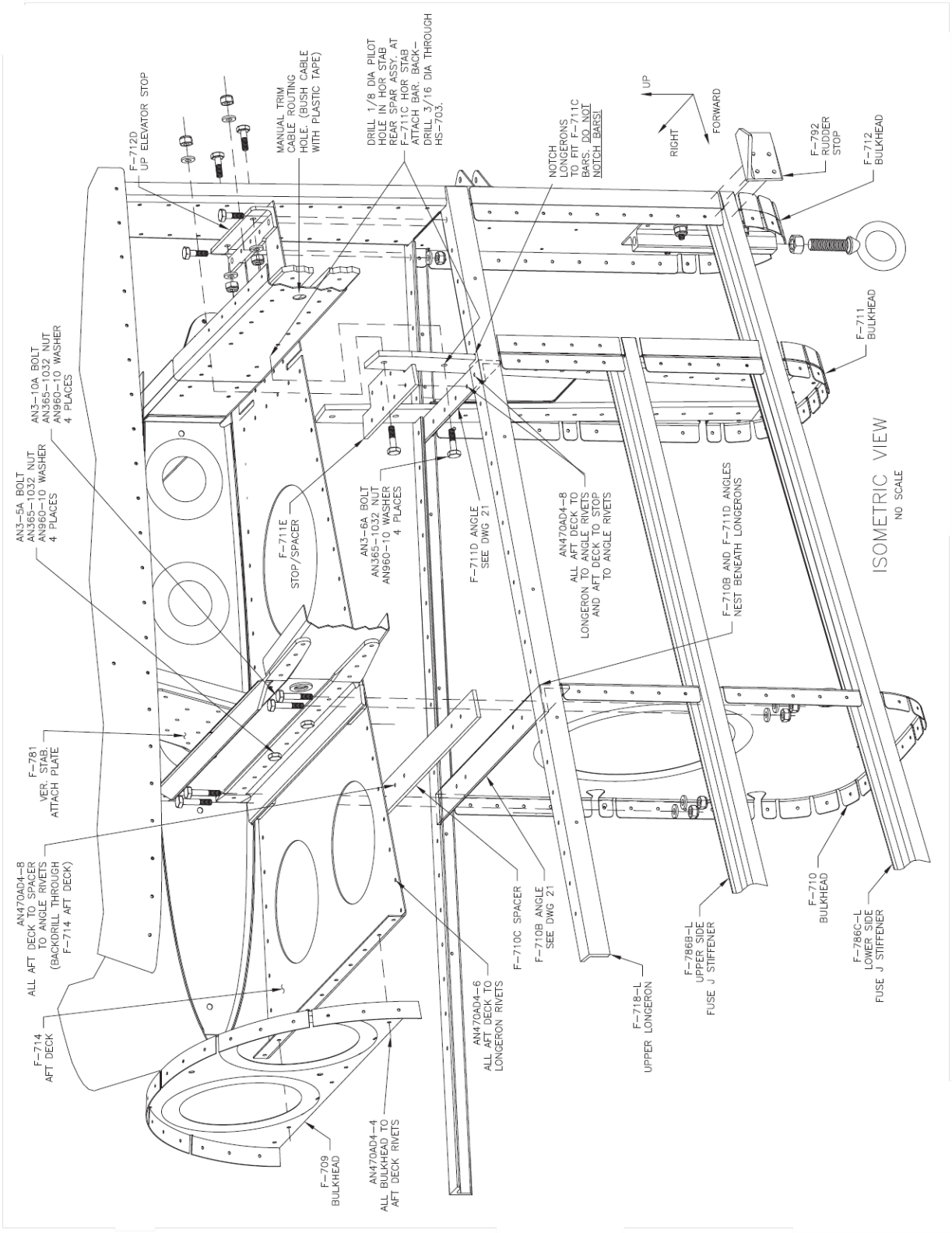

FIGURE 3: RV-7 DEG 27A TYPICAL HORIZONTAL STABILIZER ATTACH ISO

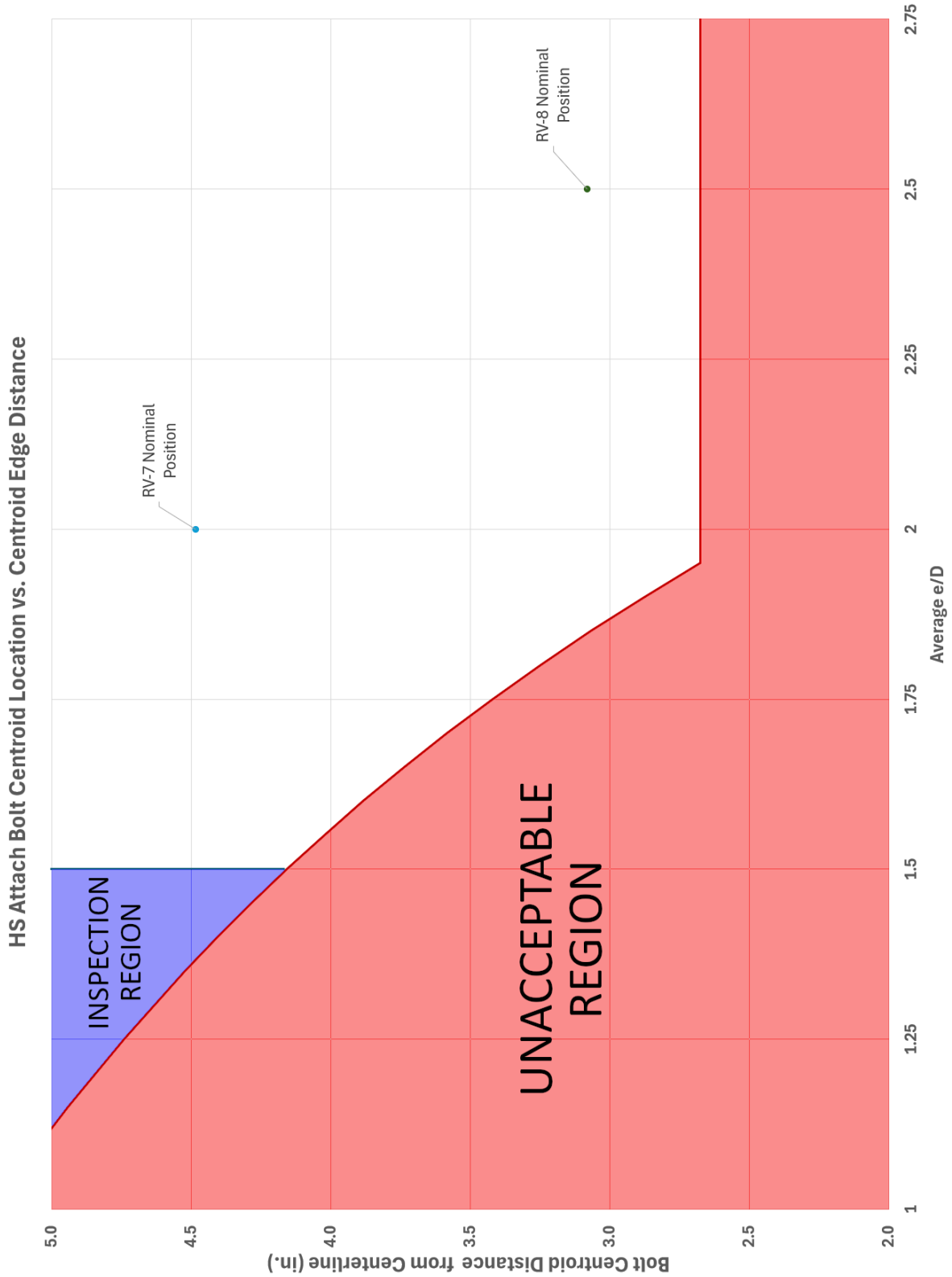

FIGURE 4: ACCEPTABLE BOLT POSITION CHART

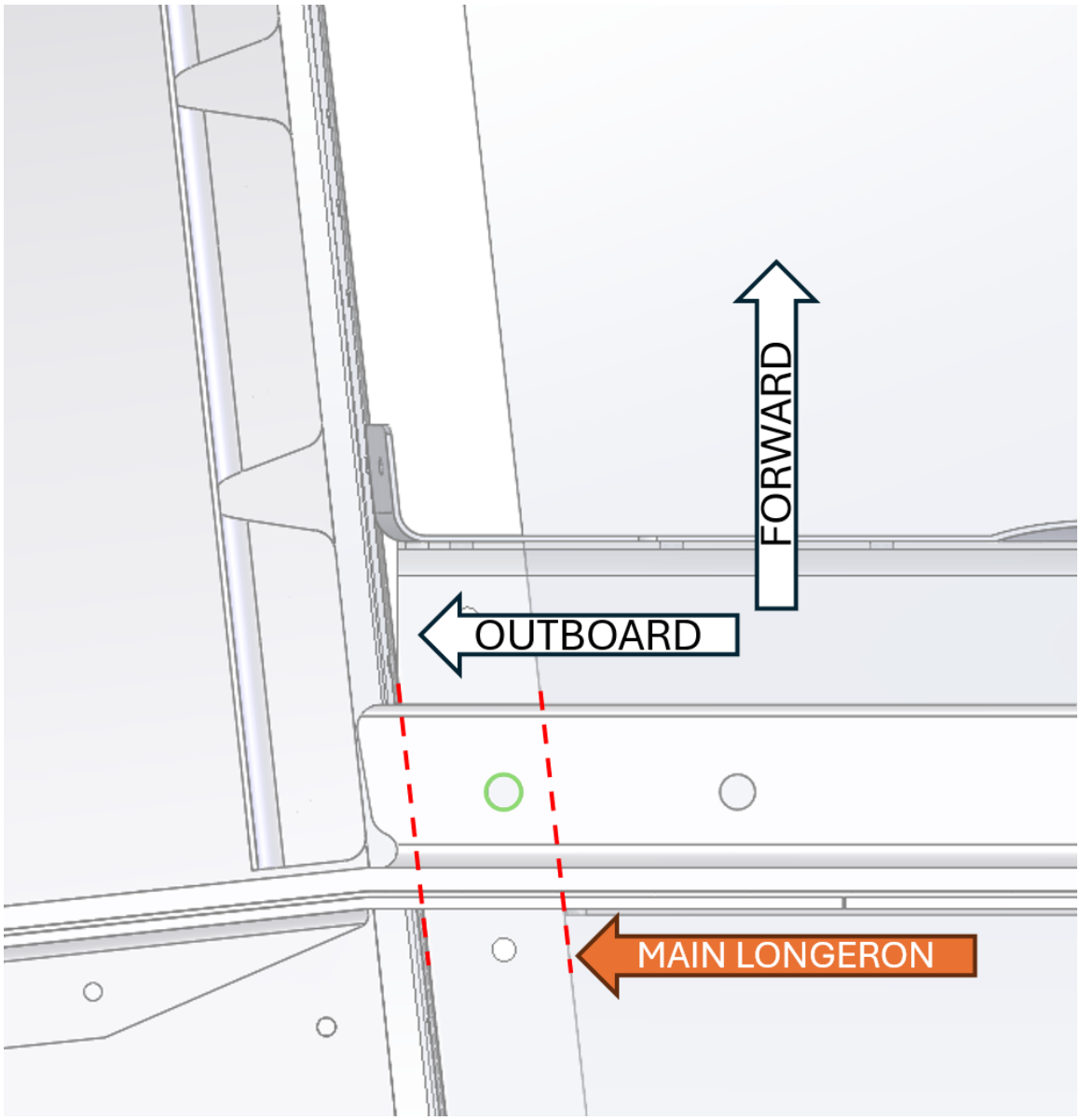

FIGURE 5: OUTBOARD BOLT POSITION & e/D

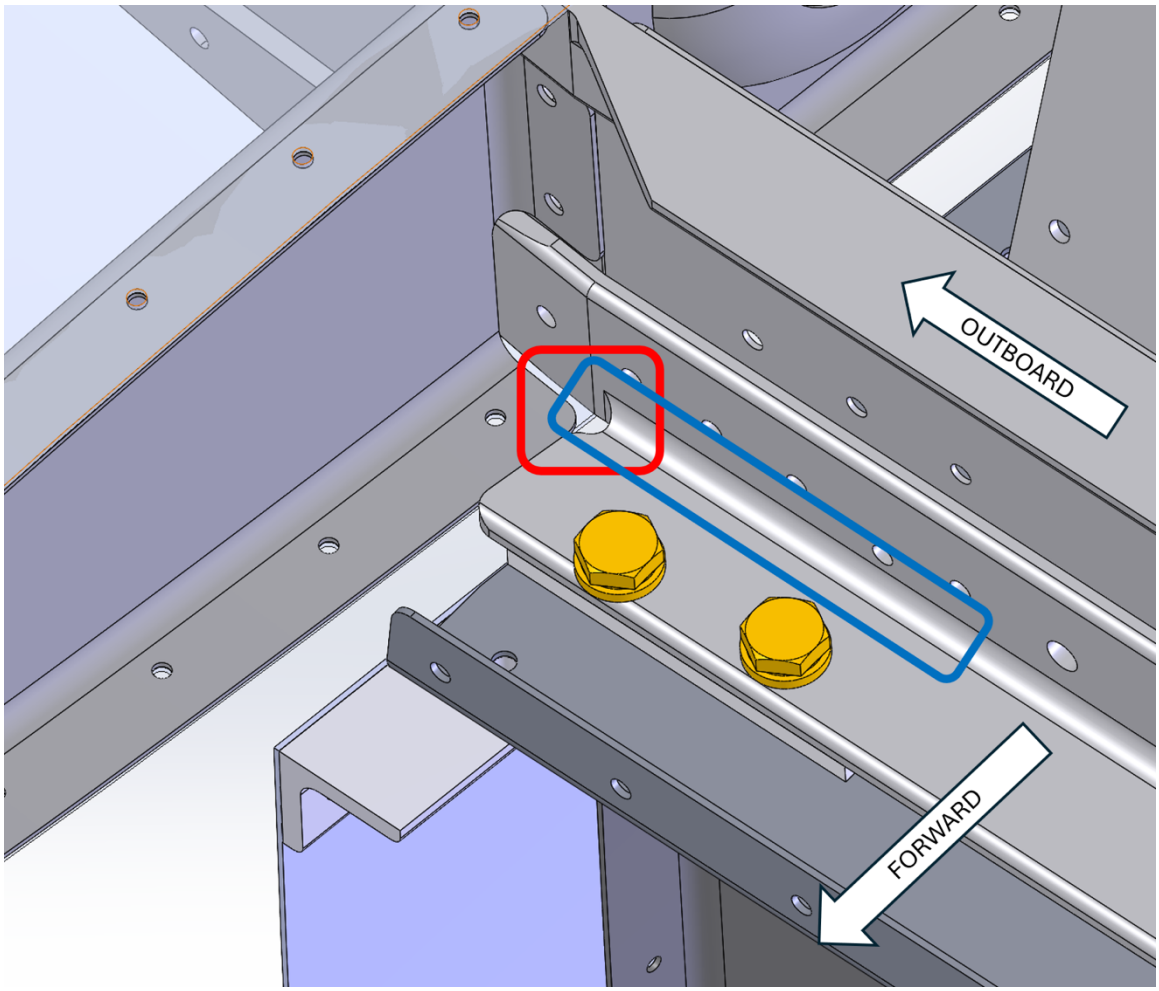

FIGURE 6: INSPECTION LOCATIONS

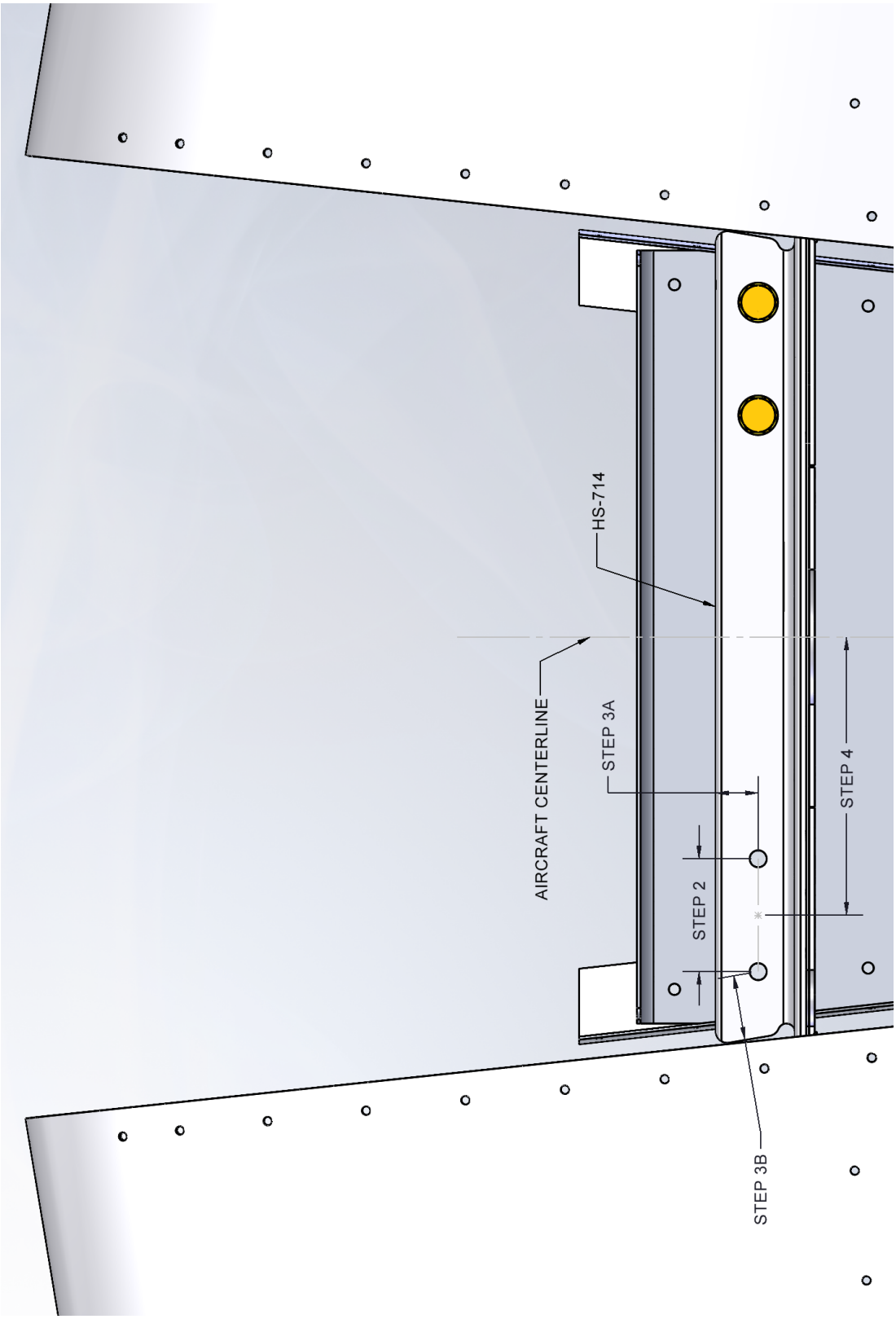

FIGURE 7: TOP VIEW STEP LOCATIONS

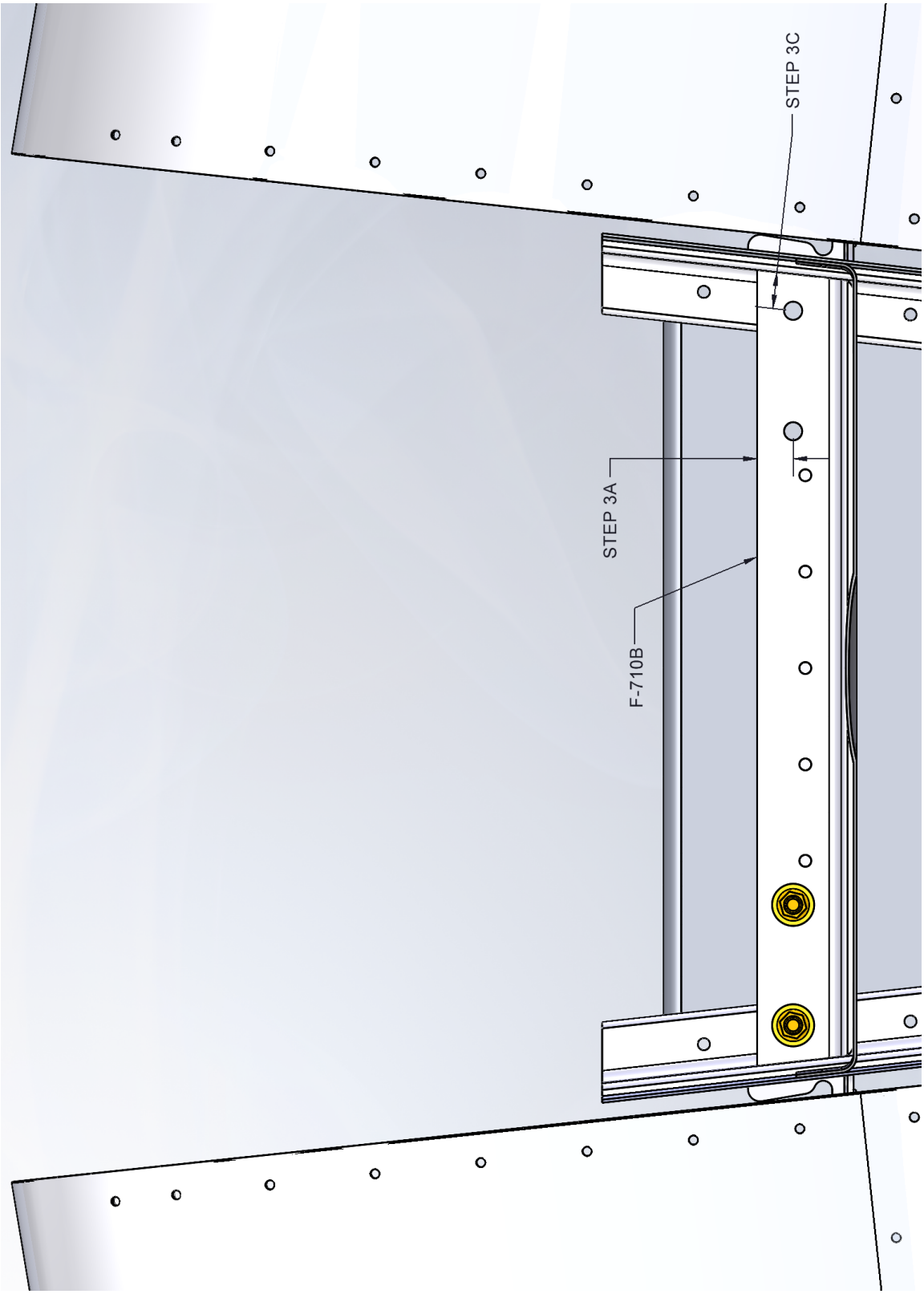

FIGURE 8: BOTTOM VIEW STEP LOCATIONS

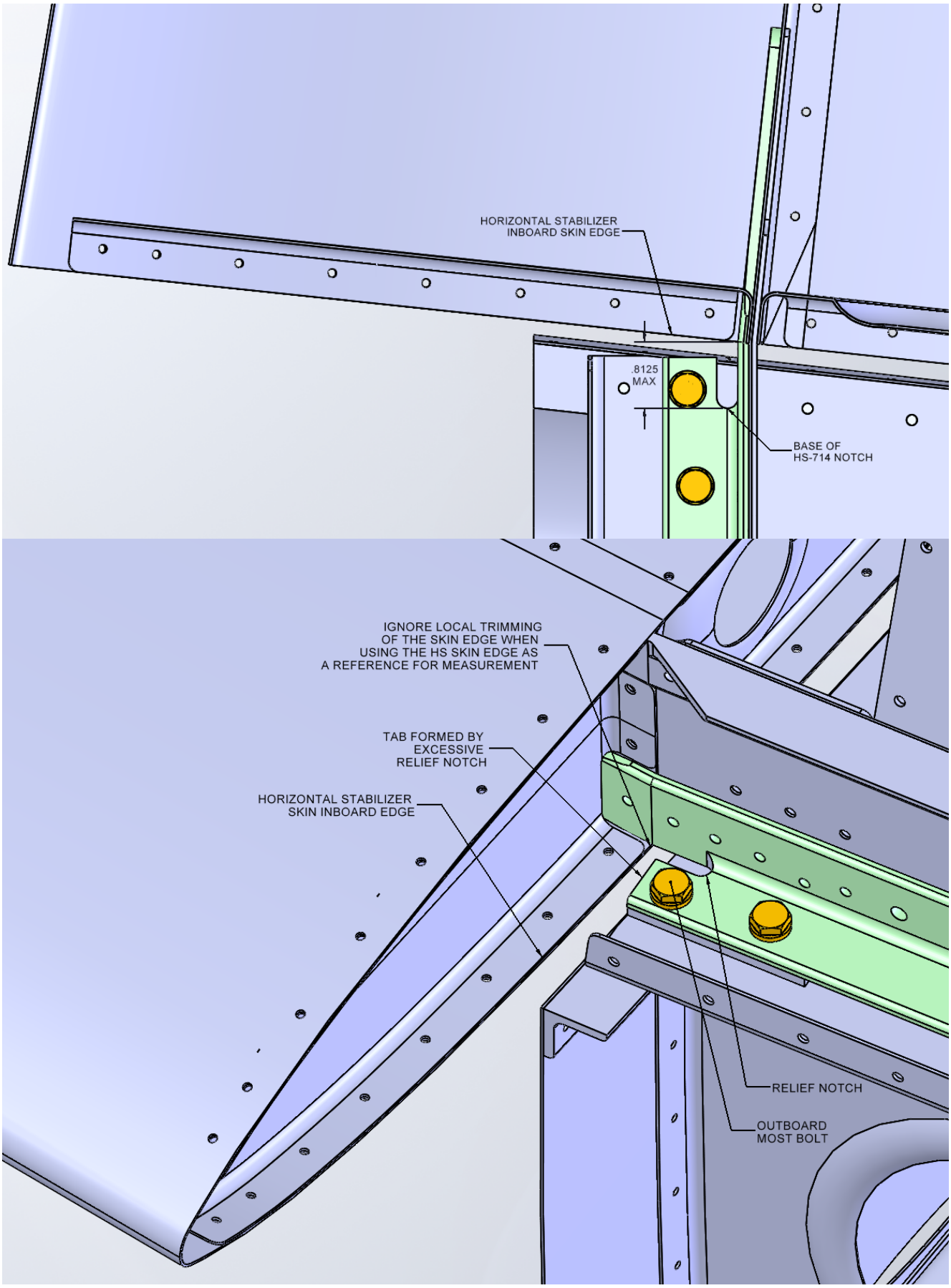

FIGURE 9: RELIEF NOTCH DETAILS

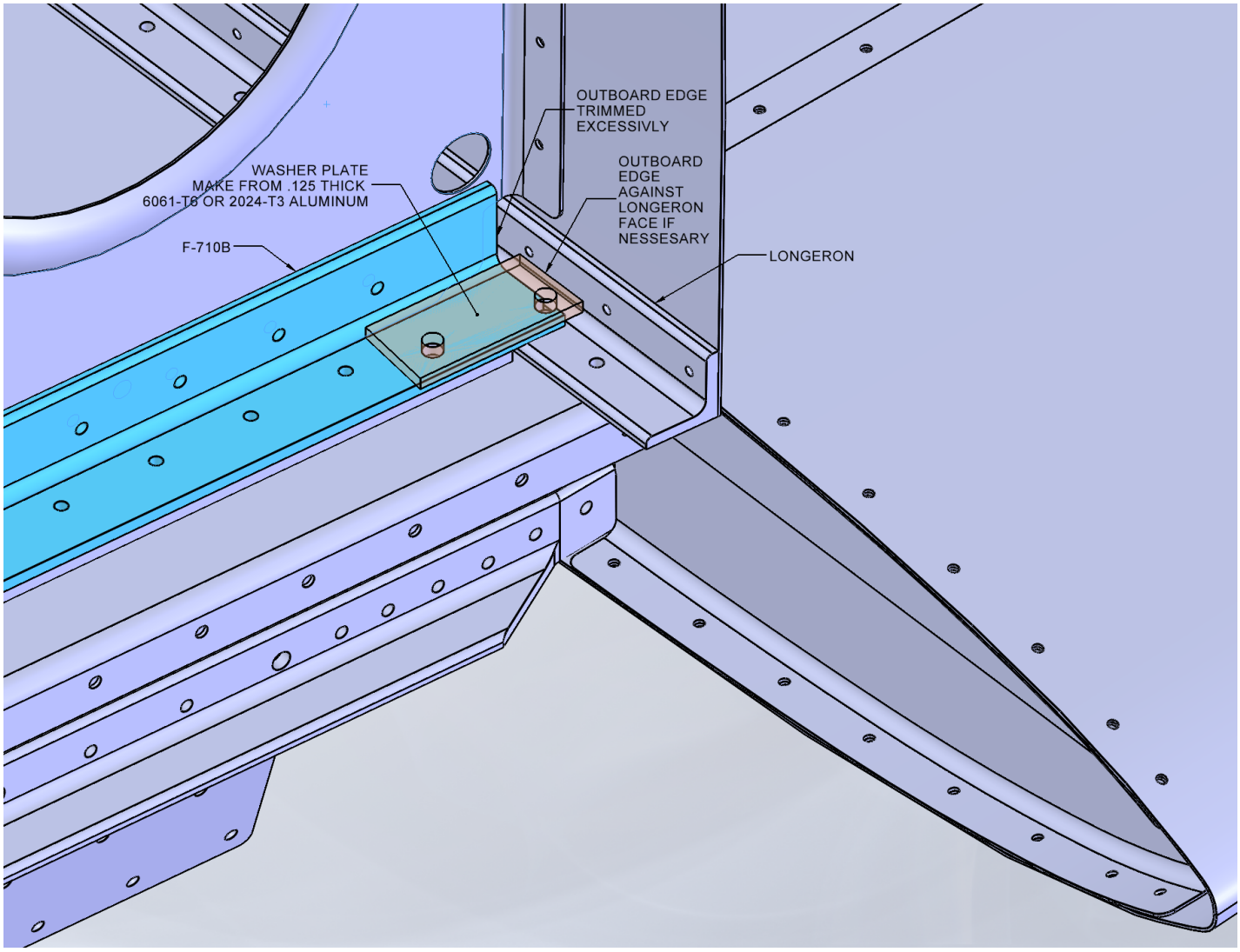

FIGURE 10: WASHER PLATE