VAN'S AIRCRAFT
TOTAL PERFORMANCE

RV12 iS

VAD-10005
MAINTENANCE MANUAL

Aircraft Serial Number: _____

THIS PAGE INTENTIONALLY LEFT BLANK

REVISION SUMMARY

Whenever revisions are issued, they must be inserted in the appropriate place in the manual. A black vertical line along the left margin of the page will identify revised text and illustrations. Changes in spelling, punctuation and formatting will not be marked.

To verify the latest revision of the Maintenance Manual (MM) compare the rev. level found on the cover page with the latest revision posted on the RV-12 Service Information page of the Van's Aircraft web site.

Rev	Page	Change	Date
0	None	Initial Release	05/03/18
1	Multiple	Publication	10/22/18
2	3-9	Added exhaust ball joint lubrication inspection item	11/15/18
	4-2	Deleted note re. use of Cherry Max CR rivets	
	14-2	Muffler Assembly Part Number is "EX-00030", was "Muffler Assembly"	
	17-3	Added note re. use of Cherry Max CR rivets	
	18-3,5	Added "Next Due" column to Service Schedule Checklist	
3	1-21	Revised Installed Equip. List for G3X	6/4/19
3.1	1-21,22	INSTALLED EQUIPMENT LIST, updated the Skyview Weight and Arm values	9/30/19
	3-8	FIREWALL FORWARD, removed cotter pins as inspection item	
	3-9	FWALL FWD, added "Check exhaust sys. ball joints for proper anti-seize lube"	
	4-2	Moved "Cherry Max CR series rivet …" note to Page 17-3	
	14-2	"EX-00030" in the Components table was "Muffler Assembly"	
	16-3	Added QR code link to how to video to access ROTAX 912iS fault info in EFIS	
	17-3	Revised "rivets" section.	
	18-3	Added: ELT Self-Test, Insp. bat. Life for RC Panel & Audio Alert Ind.	
	18-15	In the INSPECTION CHECKLIST add the "Self-Test"	
3.2	1-15	Added 220-240 in-lbs for AN5 with Nord -Lock washers on 3 blade prop	12/13/19
	11-1	Added three blade propeller Figure	
	11-2	Added two rows to components table for 3 blade prop & spinner cone	
3.3	1-21	INSTALLED EQUIPMENT LIST, updated GTX 35R weight value	05/14/20
	13-15	Added references to FLF-00024 seal washers	
	14-2	COMPONENTS and SUPPLIES, added Exhaust M8-WS12 Lock Nuts	
	14-3	Added M8-12WS Nuts to REPLACEABLE line	
3.4	1-21	Replaced GMC 307 with GMC 507. Replaced installed weight from 0.62 lbs to 0.68 lbs.	09/08/20
	1-22	Replaced GTN 650 with GTN 650Xi. Replaced installed weight from 7.0 lbs to 5.5 lbs.	
	6-2	Replaced GMC 307 with GMC 507	
	9-3	Replaced GMC 307 with GMC 507	
	11-4	Added note to dynamically balance propeller if vibrations are noticed or prop pitch has been changed	
	12-10	Replaced SPRING-00002 with SPRING-00002-L/R-1	
3.5	11-4	Removed statement on rotating prop if engine roughness was noted as it is not applicable to the Rotax installation; Rephrased dynamic propeller balance instructions	10/30/20
3.6	All	Added "Printed copies are uncontrolled." to footer.	12/03/20
	14-2	Updated part numbers in "COMPONENTS" Table	
	14-3,4	Added slip joint references to lubrication steps.	
3.7	All	Added "VAD-10005" to footer	02/26/21
	3-16, 5-13, 9-2, 18-3,	Added clarification for FLF-00015 identification and testing	

	25		
	9-4	Added FLF-00015-1 to AOA system components	
	18-3, 11	Added inspection schedule for checking control system cable tension	
	18-5	Updated Fuel Tank Finger Strainer inspection to "One time per year"	
3.8	i, All	Added VAD-10005 to title. Added "Van's Aircraft" to all pages.	12/12/22
	5-3	C-01205-3 was C-01205-2	
	1-21	GA 26X was GA 26C	
	18-3	Added line service item "Exhaust flat springs"	
4	1-21	Removed GA 37 and GPS 20A. Replaced GTX 35R with GTX 45R (Weight increased from 2.5lb to 2.9lb)	6/30/24
5	1-21, 9-2, 9-7	Added or replaced GTR 200B with GTR 205x Radio	12/05/25
	9-2	Added Garmin GTX 45R	
6	13-1, 13-4	Updated Figure to show new fuel system	01/24/26
	13-2	Updated Description of iS Engine Fuel system	
	13-3	Updated Components list	
	13-6	Added special tool supplies ¼" NPTx3/8 barb in addition to 1/8" NPTx3/8 barb	
	13-7	Updated Instructions to Drain the System	
	13-13, 13-14	Updated Fuel Prefilter Removal Instructions	
	13-14, 13-15	Updated Main Filter Removal Instructions	
	18-5	Updated service schedule and action of pre-filter. Added Fine Filter	
7	TABLE OF CONTENTS	Added Addendum A. Removed Installed Equipment List page removal note	05/18/26
	1-2	Added "…and/or regulations of the applicable CAA."	
	1-4	Removed "Maintenance or repair… Inspection certificate (airplane)." Added "The maintenance of… by that pilot."	
	1-17	Added Self Locking Nuts torque specification table	
	1-23	Added Installed Equipment List page removal note	
	1-25	Added Installed Equipment List page removal note	
	3-7	Added "(if installed)" for spinner-mounted Pitot	
	3-9	Added "(if installed in spinner)" for Pitot	
	3-14	Added "(if installed)" for stall warning vane Added inspection for Pitot system if wing-mounted and all flexible lines	
	3-16	Updated AOA System Check for spinner-mounted Pitot	
	3-17	Added AOA/Pitot System Check section for wing-mounted Pitot	
	6-2	Added reference to Addendum A-1	
	7-2	Added reference to Addendum A-2	
	8-2	Added reference to Addendum A-3	
	9-2	Added reference to Addendum A-4	
	9-7	Added "(If Installed)" for stall warning	
	11-1	Added "(If Installed)" for spinner-mounted pitot figures	
	11-3	Added "(If Installed)" for spinner-mounted pitot	
	ADDENDUM A	Added addendums to certain chapters to describe new optional equipment.	
7.1	12-1	Added reference to Addendum A-5	5/26/26
	ADDENDUM A	Added addendum A-5 to describe alt air system maintenance.	
7.2	8-2	Added 10A Fuse to list of Fuses	07/16/26
	8-6	Removed Figure 21	
	A4-2	Removed item 4 D-Sub Pins, Included on part.	
	A1-2	Updated BOM item 9 to AN365-832A	
8	OWNER/OPERATOR RESPONSIBILITIES	Added Description on who is allowed to work on airframes	07/16/26
	1-26	Added Garmin G5 to Installed Equipment List	
	18-3	Added CO Detector	
	ADDENDUM A-4	Added image detailing hookup to Garmin G5 and Alt Static Added Alt Static	
	ADDENDUM A-6	Added Addendum A-5 showing new Aux Alternator	
8.1	1-23, 9-2	Added Axis Panels	08/16/26

OWNER/OPERATOR RESPONSIBILITIES

For continued airworthiness of an RV-12iS aircraft, the owner/operator must comply with the following requirements as dictated in ASTM F2483 - Standard Specification for Maintenance Program for Light Sport Aircraft.

- **Each owner/operator of an RV-12iS shall read and comply with the Maintenance Manual and continued airworthiness information and instructions provided by Van's Aircraft Inc.**

- **Each owner/operator of an RV-12iS shall provide Van's Aircraft Inc. with up to date contact information so that Van's Aircraft may send the owner/operator supplemental notification bulletins. Contact Van's Aircraft Inc. using the following information:**

  Van's Aircraft, Inc.
  14401 Keil Road, NE
  Aurora, OR 97002 USA

  Phone: 503.678.6545
  Fax: 503.678.6560
  Website: www.vansaircraft.com
  email: orders@vansaircraft.com

- **The owner/operator of an RV-12iS shall notify Van's Aircraft Inc. of any safety of flight issue or significant service difficulty upon discovery using the Feedback Form provided in the Maintenance Manual.**

- **The owner/operator of an RV-12iS shall comply with all Van's Aircraft Inc. issued notices of corrective action and comply with all applicable aviation authority regulations regarding maintaining the airworthiness of the LSA. Notices of corrective action are published on the Van's Aircraft web site RV-12iS Service Information Page.**

- **An owner of an RV-12iS shall ensure that any needed corrective action be completed as specified in a notice.**

- **Should an owner/operator not comply with any mandatory service requirement the RV-12iS shall be considered not in compliance with applicable ASTM standards and may be subject to regulatory action by the presiding aviation authority.**

- **The owner/operator may submit written comments and questions regarding any mandatory Notice to the organization who issued the Notice.**

- **Any change resulting from a major or minor repair or alteration shall comply with the ASTM standards listed in the aircraft's statement of compliance. Any major change shall be approved by the aircraft manufacturer. Personnel making a minor change must have received ASTM training. Changes that do not comply to ASTM consensus standards shall require the aircraft to receive a new airworthiness certificate as an experimental aircraft before return to service.**

- **Major repairs and/or alterations to an RV-12iS shall be documented and submitted to Van's Aircraft Inc. using the information provided in bullet 2.**

TABLE OF CONTENTS

CHAPTER 1- GENERAL

INTRODUCTION 1-1
Purpose 1-1
Summary 1-1
Scope 1-2
Replacement Parts 1-3
Method 1-3
APPLICABLE THROUGHOUT 1-4
General Safety 1-4
Safety of Flight Reporting Procedure 1-5
Helpful Terminology 1-5
Abbreviations 1-7
Units 1-8
TOOLS AND EXPENDABLES 1-9
ENGINE 1-13
LUBRICATIONS AND CAPACITIES 1-14
Engine Oil 1-14
Brake Fluid 1-14
Engine Coolant 1-15
Fuel 1-15
Tire Pressures 1-15
Torque Values 1-16
GENERAL PROCEDURES 1-18
Lifting & Supporting the fuselage 1-18
WEIGHT AND BALANCE 1-20
INSTALLED EQUIPMENT LIST 1-23

CHAPTER 2- SERVICE SCHEDULE 2-1

CHAPTER 3- INSPECTION 3-1

OVERSTRESS 3-1
OVERVIEW 3-2
INSPECTION DESCRIPTION 3-3
Pre-inspection / Post-inspection 3-3
Cockpit 3-5
Avionics 3-6
Optional Equipment 3-7
Emergency Locator Transmitter 3-7
Propeller 3-7
Engine 3-8

Firewall Forward 3-8
Empennage 3-10
Fuselage 3-12
Landing Gear 3-13
Wing / Center Section/AOA 3-14
Angle-Of-Attack System 3-16
Angle-Of-Attack/Pitot System 3-17
Paperwork 3-18

CHAPTER 4 - STRUCTURAL REPAIRS 4-1

OVERVIEW 4-1
MINIMUM CERTIFICATION 4-2

CHAPTER 5 - STRUCTURES 5-1

OVERVIEW 5-2
FUSELAGE 5-2
WING AND FLAPERON 5-4
EMPENNAGE 5-6
LANDING GEAR 5-8
FAIRINGS - WHEEL AND GEAR LEG 5-10
SERVICE 5-12

CHAPTER 6 - FLIGHT CONTROLS 6-1

OVERVIEW 6-2
SERVICE 6-3

CHAPTER 7 - BRAKE SYSTEM 7-1

OVERVIEW 7-2
SERVICE 7-2

CHAPTER 8 - ELECTRICAL SYSTEM 8-1

OVERVIEW 8-2
SERVICE 8-4

CHAPTER 9 - INSTRUMENTS & AVIONICS 9-1

OVERVIEW 9-2
PITOT & STATIC 9-3
SERVICE 9-4

CHAPTER 10 - UTILITY SYSTEMS 10-1

OVERVIEW 10-2

HEAT 10-2
VENTILATION 10-3
SERVICE 10-4

CHAPTER 11 - PROPELLER 11-1

OVERVIEW 11-2
SERVICE 11-2
Spinner & Pitot Tube 11-3
Prop & Hub 11-3

CHAPTER 12 - FIREWALL FORWARD 12-1

OVERVIEW 12-2
Engine 12-3
SERVICE 12-4

CHAPTER 13 - FUEL SYSTEM 13-1

OVERVIEW 13-2
Fuel System Schematics 13-4
SERVICE 13-6

CHAPTER 14 - EXHAUST SYSTEM 14-1

OVERVIEW 14-2
SERVICE 14-2

CHAPTER 15 - PAINTING AND COATINGS 15-1

OVERVIEW 15-2
SERVICE 15-3

CHAPTER 16 - TROUBLESHOOTING 16-1

CHAPTER 17 - FEEDBACK & REPLACEMENT PARTS 17-1

REPORTING METHODS 17-1
REPLACEMENT PARTS 17-2
SUBSTITUTE PARTS 17-3

CHAPTER 18 - SUPPLEMENT 18-1

SERVICE SCHEDULE 18-3
INSPECTION CHECKLIST 18-7
3-VIEW 18-31
FEEDBACK FORM 18-33

CHAPTER 19 - GLOSSARY 19-1

CHAPTER 20 - INDEX 20-1

ADDENDUM A A1-1

A1: CONTROL STICKS A1-1
A2: PARKING BRAKE A2-1
A3: CANOPY LIGHT A3-1
A4: PITOT A4-1

APPENDIX 'A' - KIT ASSEMBLY INSTRUCTIONS (KAI) (NOT PART OF, BUT AN APPENDIX TO THIS MANUAL)

Addendum Documents list (Notification, Service Bulletin, etc.)

DOCUMENT NAME	DATE ADDED
ADDENDUM A	5/5/2026

THIS PAGE INTENTIONALLY LEFT BLANK

Chapter 1 - GENERAL

INTRODUCTION

PURPOSE

The purpose of this manual is to provide guidance to RV-12iS owners, pilots, mechanics, regulatory officials, and aircraft/component manufacturers that are certified to perform maintenance, repairs, and alterations on the light sport aircraft covered in this manual.

SUMMARY

This manual contains maintenance instructions for the RV-12iS light sport aircraft. The RV-12iS is a single engine, fixed tricycle gear, full-cantilever monoplane. The two-seat cockpit is enclosed with a tip-up windscreen/canopy. The occupants sit side-by-side, aft of the engine and forward of the wing spar. Both of the wings are quick removable. The flaperons remain with the wings and self-connect to the control linkage when the wings are installed. The empennage consists of a vertical stabilizer, rudder and stabilator with anti-servo/trim tab.

The airframe is a semi-monocoque aluminum structure, with some steel and fiberglass parts. Fiberglass composite parts are used to finish some non-structural portions of the aircraft.

The pilot and passenger board the aircraft from either side using the boarding step and a reinforced area near the leading edge of the wing. The pilot is seated on the left side (from within the cockpit) of the aircraft. A combination Electronic Flight Information System (EFIS) and Engine monitoring System (EMS) with graphical user interface is used to monitor and report flight and engine performance information to the pilot.

The RV-12iS is equipped with either a Rotax 912ULS (with dual carburetors) or a Rotax 912iS Sport (electronic fuel injection / FADEC) 100 hp four cylinder engine, enclosed in a fiberglass composite cowling at the front of the aircraft. Engine power is transferred via an integral gearbox to a Sensenich composite propeller.

The pilot and the passenger both have full flight and ground controls. Pitch and roll is controlled from either control stick. The control sticks are linked by push/pull rods and torque tubes to the flaperons and linked by cables to a stabilator. The flaperons are operated from a switch near the throttle controlling an electric linear actuator. Yaw is controlled using rudder pedals linked by cables to a traditional rudder that is hinged to a fixed vertical stabilizer. The rudder pedals have integrated left and right foot pedals that are used to independently control the wheel brake on the corresponding side.

SCOPE

• NOTE: This maintenance manual is intended to be used in conjunction with the RV-12iS Kit Assembly Instructions (KAI) when completing maintenance or repair processes.

All of the service and maintenance requirements that are unique to the RV-12iS S-LSA are included in this manual. The general service and maintenance duties that are common to standard aircraft still apply to the RV-12iS regardless of the inclusion of those requirements in this manual, so FAA Advisory Circular - Aircraft Inspection, Repair, and Alterations, AC 43.13 is another valuable reference.

All inspection and maintenance and all maintenance log entries must be made in accordance with 14 CFR, FAR's and/or the aircraft's Operating Limitations, and/or regulations of the applicable CAA.

The manufacturers of third party components provide manuals that include complete service and maintenance requirements that are specific to these components. The current service and maintenance manuals from any third party manufacturer, such as; engine, propeller, avionics, etc. always take precedence over the related content in this manual. There are references to third party documentation in this manual, as well as some supplementary information which is **for convenience only**. It is recommended to refer directly to the manufacturer's service manuals for complete service information that is unique to applicable components.

The manufacturers that provide operating and/or maintenance manuals to use in conjunction with this manual are as follows:

- Rotax – engine
- Sensenich – propeller
- Matco – wheels and brakes
- Grove – wheels and brakes
- Dynon – EFIS / EMS, GPS
- Garmin – EFIS / EMS, GPS and Nav/comm
- TCW – Backup Battery
- ACK – ELT
- Odyssey – battery
- EarthX – battery
- Van's Aircraft – RV-12 Kit Assembly Instructions (KAI).

The service and inspection portions of this manual indicate the minimum certification requirements for a person doing maintenance or repairs on an S-LSA RV-12iS in the United States. Certification requirements for service and maintenance may vary around the world. It is essential to determine the correct and legal maintenance and certification requirements applicable to the region in which the airplane is registered. The documents necessary to determine these requirements for S-LSA in the United States are as follows:

- RV-12 Maintenance Manual

- Federal Aviation Regulations for Light Sport Aircraft Maintenance Technicians

REPLACEMENT PARTS

The RV-12iS KAI is the primary reference for replacement part information. Section Four in the KAI is a directory of all part numbers with reference information of where to find it within the main KAI manual. The documentation produced by third party parts manufacturers (listed above) should be used as the primary reference for part information for those components.

METHOD

The RV-12iS can be equipped with either a Rotax 912ULS or a Rotax 912iS engine. For the purpose of this manual, when entire sections, specific maintenance, or inspection tasks are specific to just one of the aircraft versions, a [ULS] or [iS] notation will be used.

The pages throughout this maintenance manual are numbered at the bottom with the chapter number followed by a dash and the page number of the applicable chapter. There are many cross-references in this manual. Cross-references within this manual are made using the page numbers, unless otherwise specified. Following is an example of a typical cross-reference to additional information within this manual. *Example: When there is additional information that is related to this sentence the cross-reference to that page will be in parenthesis following the period. (1-2)*

Chapter 1 will introduce general information that is helpful for using this manual. General information includes manual introduction, general safety information, notification methods, abbreviations, collective tool list, list of expendables, lubrication and capacities and general procedures.

Chapter 2 introduces the *service schedule checklist*.

Chapter 3 provides an explanation of the annual/100 hour *inspection checklist* including illustrations that clarify some checkpoints of the aircraft. Read Chapter 1-3 prior to performing the inspection, and use it as a reference during the inspection.

Chapter 4 and following begin with an illustration of the subject discussed, an 'Overview' of the chapter content and a list of 'Components'. The 'Service' section, where applicable, begins with a table of 'Supplies', which includes; 'Tools', 'Expendable' and 'Replaceable' parts. The service section provides instructions for 'General' removal, replacement and installation that are acceptable for the owner or operator to perform. The service section also includes instructions for 'Service Schedule Procedures' which correspond to the items on the 'Service Schedule Checklist'. Each service section task includes a table that summarizes the properties of the task.

The task summary table lists the Tools, Expendable, and Replaceable items that are task specific. Only tools specific to the immediate task will be listed. In cases that another task must be done to complete the immediate task, the tools needed for the other task will be given in the instructions that correspond to that task. Some recommended tools will require other tools to be effective; for example: sockets will require a ratchet; drill bits will require a drill. Unless otherwise specified the driving tool is implied rather than listed. The table also includes the 'Service Rating' applicable to

the task, the 'Minimum Certification' required to perform the task legally, and 'Additional References' that may be helpful or necessary to complete the task. Each hardware item to be removed in the service instructions will be followed by the quantity (if greater than one) in parenthesis. *For example, an instruction step that requires the removal of one bolt, six washers and two nuts will appear as follows: 1. Remove the bolt, washers (6), and nuts (2).*

Chapter 16 offers direction for solving potential problems that may puzzle the owner of any aircraft.

Chapter 17 provides instructions for reporting the discovery of anomalies that could compromise the airworthiness of the aircraft as dictated in ASTM F 2295 Section 5.

Chapter 18 includes the *inspection checklist*, *service schedule checklist* and other helpful documents.

APPLICABLE THROUGHOUT

GENERAL SAFETY

Safety must be considered the first priority when performing maintenance or service on an aircraft or part. The content in this manual is only for use in a safe work environment with all necessary safety equipment readily available and in use when applicable.

The maintenance of Light Sport Category Aircraft is regulated by 14 CFR part 43, FAA-H-8083-3C Airplane Flying Handbook, and FAA-H-8083-3C, Airplane Flying Handbook – Addendum (published October 20, 2025).

Light-sport category aircraft may be maintained and inspected by:

1. A repairman (light-sport category aircraft) with a Maintenance rating (LSRM); or
2. A repairman (light-sport category aircraft) with an Inspection rating on aircraft owned by that repairman; or
3. An FAA-certificated Mechanic with Airframe and Powerplant (A&P) ratings; or
4. An appropriately rated repair station; or

The holder of a sport pilot certificate (SPC) may perform preventive maintenance on a light sport category aircraft owned or operated by that pilot.

Prior to performing maintenance or repair always disconnect the negative (-) battery cable from the battery.

The strength of an airframe designed using semi-monocoque construction relies on both the skins and the skeleton for complete structural strength. If a skin has been damaged, the underlying structure may also have been damaged. Carefully inspect any damage to assess the extent of the damage. If the damage is localized to just outer

skins, they can be removed and replaced. If inspection indicates that the substructure is also damaged the damaged parts must be replaced or the aircraft manufacturer must be consulted for further assessment.

Every time hardware is removed it must be checked for signs of wear or fatigue. Inspect the head, shank, and threads of bolts, and the edges and threads of nuts. Safety wire, cotter pins, lock washers and similar hardware are only reliable for one term of service and should be replaced on removal with the exception of the Nordloc® washers used on the propeller bolts (refer to propeller documentation). It is permissible to reuse nylock and all steel style self-locking nuts if it is determined that the self-locking feature has not been degraded. **Always replace questionable hardware.**

Operation in Extreme Conditions: Exposure to extreme climatic conditions, including but not limited to dust, salt, debris, bugs, will warrant more frequent inspections of air filters, coolant radiator, and oil cooler as defined in the Rotax maintenance manual. Frequent exposure to extreme conditions or altitudes may demand additional equipment or maintenance. Contact an authorized Rotax distributor for consultation.

SAFETY OF FLIGHT REPORTING PROCEDURE

To maintain the highest level of safety and as dictated in ASTM F 2295 Section 5, the FAA requires and Van's Aircraft Inc. requests, notification of any safety of flight issue, or service or maintenance difficulties that could compromise the airworthiness of the RV-12iS aircraft. **A feedback form is provided in the Supplement section of this manual. Refer to Chapter 17 for a description of a valuable report and the different reporting methods available.**

HELPFUL TERMINOLOGY

▲ WARNING: INDICATES AN ACTION NECESSARY TO PREVENT INJURY OR DEATH.

■ CAUTION: INDICATES AN ACTION NECESSARY TO PREVENT DAMAGE TO PARTS OR PROPERTY.

● ***NOTE: PROVIDES VALUABLE ADDITIONAL INFORMATION.***

The Glossary provides definitions to many of the terms used throughout this manual.

ABBREVIATIONS

A&P*	Airframe and Power-plant Mechanic	Kph	Kilometers per hour
AKI	Anti-knock index (octane rating)	Kts	Knots
API	American Petroleum Institute	lb	U.S. pound
AST*	Anti-servo/trim tab	LL	Low-Lead
AVGAS	Aviation Gasoline	LSA	Light Sport Aircraft
C	Celsius	LSA-RM*	Light Sport Aircraft – Repairman Maintenance rating
CG	Center of Gravity	ltr	Liter
CHT	Cylinder Head Temperature	m	meter
cm	Centimeter	Max	Maximum
CST*	Category specific training	mb	millibar
EFIS*	Electronic Flight Information System	mi	Statute mile
EGT	Exhaust Gas Temperature	Min	Minimum
ELT*	Emergency Locating Transmitter	ml	Milliliters
EMS	Engine Monitoring System	mm	Millimeter
F	Fahrenheit	mph	miles per hour
FAA	United States Federal Aviation Administration	naut mi	Nautical miles
FAR's	Federal Aviation Regulations	Nm	Newton meters
fl. oz.	fluid ounce (U.S.)	OAT	Outside Air Temperature
ft	Feet	oz	Ounce
ft/lbs	Foot-Pounds	POH*	Pilot Operating Handbook
FWD	Forward	psi	Pounds per Square Inch
gal	Gallon	pt	Pint (U.S.)
GPS*	Global Positioning System	RON	Research Octane Test
HP	Horse Power	RPM	Revolutions Per Minute
ID	Inner Diameter	S-LSA*	Special Light Sport Aircraft
in	Inch (depending on context)	S/N	Serial Number
in^2	Square inches	SAE	Society of Automotive Engineers
in/lb	Inch-Pound	SPC*	Sport Pilot Certified
KAI*	Kit Assembly Instructions	TT	Total Time
kg	kilogram	VDC	Voltage, Direct Current
kPa	kilopascal		
* -- See glossary for definition			

UNITS:

Speed:				
1 mph	=	1.64 kph	=	0.869 kts
Distances:				
		1 in	=	2.54 cm
1 ft	=	12 in	=	0.305 m
1 mi	=	5,280 ft	=	1.61 km
1 naut mi	=	1.15 mi	=	1.85 km
Mass:				
		1 oz	=	28.3 grams
1 lb	=	16 oz	=	0.454 kg
Pressure:				
		1 psi	=	6.895 kPa
		1 mb	=	0.1 kPa
Volume:				
1.8 cubic in	=	1 fl. oz	=	29.57 ml
1 quart	=	2 pints	=	32 fl. oz
1 gal	=	8 pints	=	3.79 ltr
Torque:				
	=	1 in/lb	=	0.113 Nm
1 ft/lb	=	12 in/lb	=	1.356 Nm
Temperature:				
(F-32)/1.8	=	(1.8 x C)+32		

TOOLS AND EXPENDABLES

There are many aircraft tool suppliers available. An Internet search can be conducted to determine which supplier can provide the necessary tools

● ***NOTE: THIS TOOL LIST DOES NOT INCLUDE ALL OF THE TOOLS THAT MAY BE REQUIRED FOR THE INSPECTION AND MAINTENANCE PROCEDURES. ACCESS TO A TYPICAL GENERAL TOOL KIT IS ASSUMED. SPECIALTY TOOLS REQUIRED FOR A MAINT. OR INSPECTION PROCESS ARE LIST IN EACH SECTION WHEN RELEVENT.***

TOOLS

- Combination wrenches:
  - 1/4
  - 5/16
  - 11/32
  - 3/8
  - 7/16 (2)
  - 1/2
  - 9/16
  - 11/16
  - 1 ½
  - 10mm
- Ratchet
- Sockets:
  - 5/16
  - 11/32
  - 3/8
  - 7/16
  - 1/2
  - 9/16
  - 3/4
  - 1 1/2
  - 10 mm
  - 11 mm
  - 13 mm
- Allen wrenches:
  - 3/16
  - 1/4
  - 5/16
  - 4mm
  - 5mm
  - 6mm
  - 8mm
- Torque wrench (in/lbs & ft/lbs)
- 5/8 or 16 mm spark plug socket
- Screwdrivers:
  - #2 Phillips
  - #3 Phillips
  - 3/16 Flat Blade
- Power-drill
- #30 drill bit
- Blind rivet tool
- Straight edge
- Razor knife
- Flashlight
- Step ladder
- Wire cutters
- Battery charger
- Multi-meter
- Syringes
- Wooden dowels 1/2 - 1 inch dia. and 1 1/2 - 1 3/4 in. dia.
- Oil Filter wrench
- Oil Filter cutter
- Two 25 in. padded stands each rated to support a minimum of 500 pounds
- Container (various sizes, suitable for petroleum)
- 24-inch length of 1/2-inch I.D. fuel hose
- Scouring pad or equivalent
- Sandpaper (various grades)
- Spark plug gap tool (wire type)
- Compression tester
- Magnifying Glass
- Small square
- Tire air pressure gauge
- Needle nose pliers
- 5-inch "C" clamp
- Terminal crimping tool
- Locking (vice grip style) pliers
- 2 1/2 x 3/16 bolt, washer, nut
- Vacuum gauge set
- Portable weight scale (tension type)
- Fire extinguisher
- Pump style oil can with hose
- Safety wire twisting pliers

● ***NOTE: TOOLS DIFFER IN SIZE AND CONFIGURATION. THE FOLLOWING ILLUSTRATIONS ARE ONLY EXAMPLES OF WHAT A TOOL MAY LOOK LIKE.***

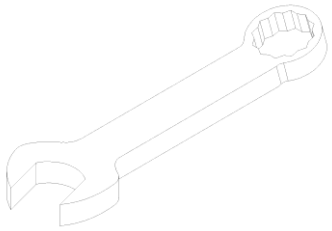 Combination Wrenches	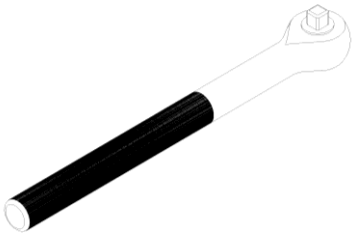 Ratchet	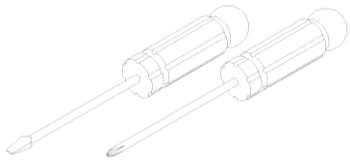 Screwdrivers
Sockets	Allen Wrenches	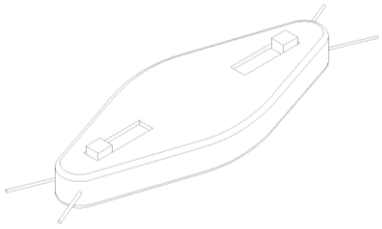 Gap Gauge
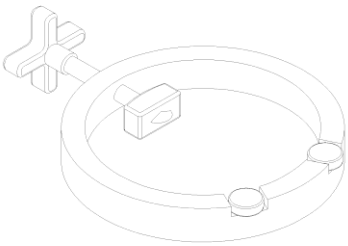 Oil Filter Cutter	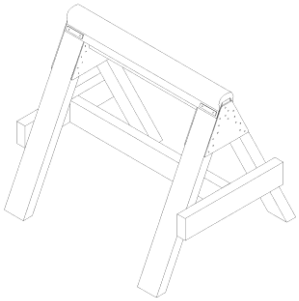 Heavy Stands	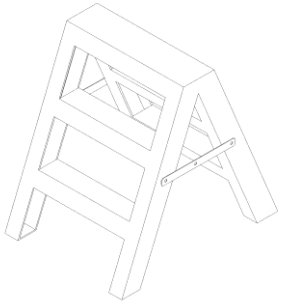 Step Ladder
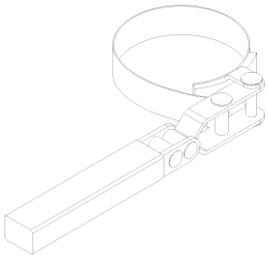 Oil Filter Wrench	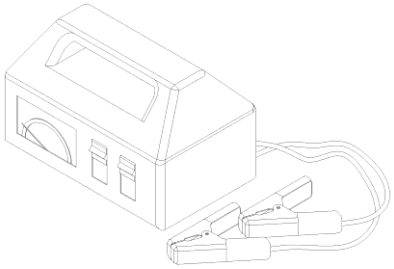 Battery Charger	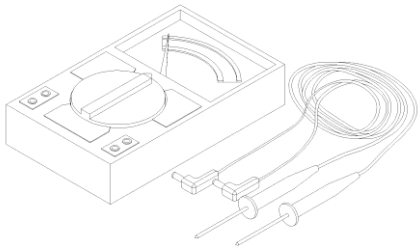 Multi-meter
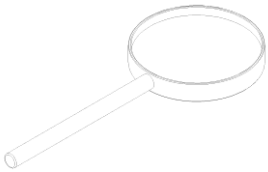 Magnifying Glass	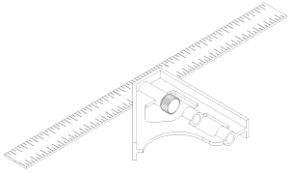 Square	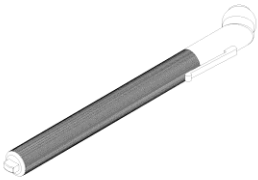 Air Pressure Gauge

Figure 1

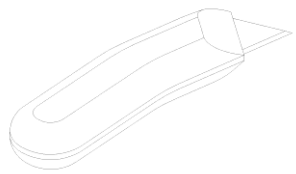 Razor Knife	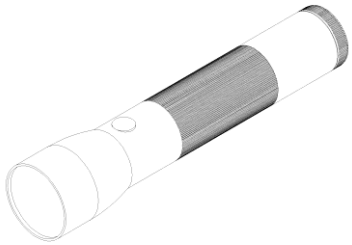 Flashlight	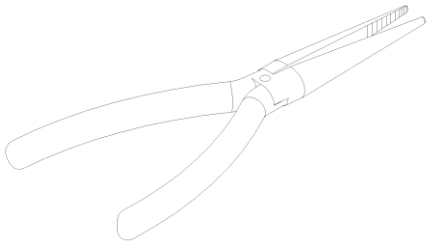 Needle-nose Pliers
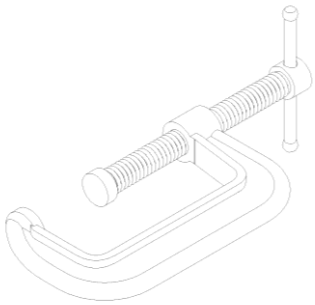 C-clamp	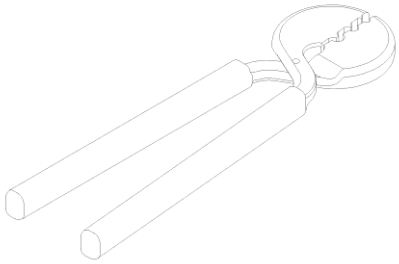 Terminal Crimper	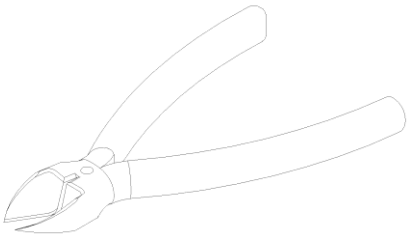 Wire Cutter
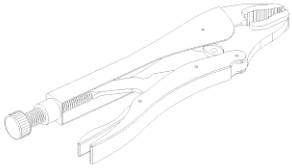 Locking Pliers	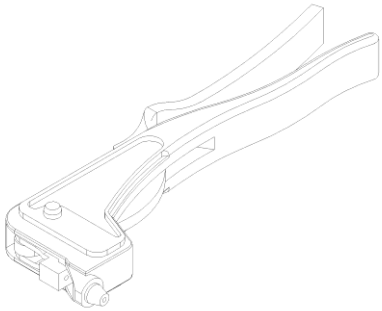 Blind Riveter	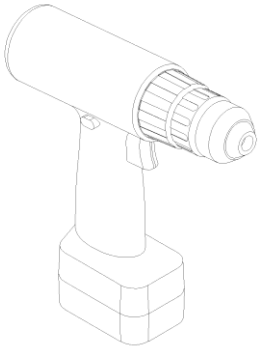 Power-drill
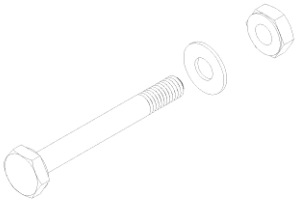 Hardware	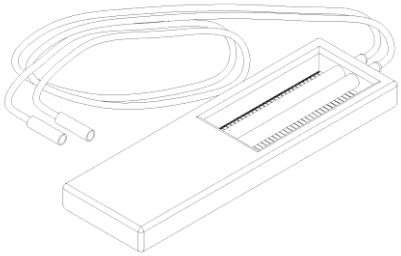 Dual Vacuum Gauge	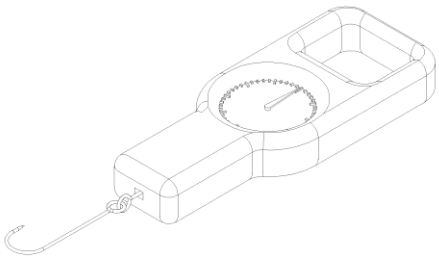 Tensile Weight Scale

Figure 1

■ ***CAUTION: REPLACEMENT PARTS MUST BE OF THE EQUIVALENT SIZE, TYPE AND RATING AS THE ORIGINAL PARTS FROM THE MANUFACTURER.***

EXPENDABLE

PARTS	PART NUMBER
Oil filter	Rotax 825 701 (or equivalent)
Fuel Filter [iS]	Rotax 874 060
Copper crush ring (for oil tank drain plug)	Rotax 250010
Gas-6 O-ring gasket [ULS]	GASKET GAS-345
Tire	U-5:00X5 Tire (any aircraft grade 5:00X5, 4 or 6 ply tire is acceptable.
Inner tube	U 5:00X5-6IT (any aircraft grade 5:00X5-6 inner tube is acceptable)
Brake shoe linings	M66-106 (or equivalent)
Fuses	ATO/ATC ¼s style 1, 2, 3, 5, 7.5, 30 Amp rating. All fuse values of 3 amp and higher are required to have LED "blown fuse" indicators.
LUBRICANTS	**RECOMMENDATION OR EQUIVALENT**
Engine oil	As specified in latest Rotax documentation
Spray lubricant	LPS2, Tri-Flow, or similar
Dry lubricant (candle wax, etc.)	TOOL BOELUBE PASTE
Wheel bearing grease	Aeroshell 22 or equivalent
Pipe Thread-Sealant	Loctite 567 or equivalent
Anti-seize compound, High temp	Loctite Anti-Seize or equivalent (High Temp. Nickel based)
Silicone Grease	Down Corning #4 or equivalent
Hydraulic fluid	MIL-PRF-83282 (preferred) or MIL-H-5606A
Air filter cleaner and oil	EA K&N 99-5050 KIT
MISCELLANEOUS	**RECOMMENDATION OR EQUIVALENT**
Engine coolant	1:1 Water/Ethylene Glycol (refer to Rotax engine documentation)
Safety wire	WIRE, SAFETY .032
Fuel tank sealant	MC-236-B1/2 or MC-236-B2
Plexus Cleaner/Polish	CA CANOPY CLEANER
Cotter pins	MS24665-xyz
Plastic tie wraps	Non-specific
Wire terminals	Male & Female spade, splice, and ring
Primer	Any protective primer suitable for use on aluminum and/or steel as appropriate
Decorative touch-up paint	From paint process
Thread locking compound	Loctite 243 or Equiv.

ENGINE DESCRIPTION

The LSA covered by this manual may be equipped with either a Rotax 912ULS or a Rotax 912iS power plant. Both are an over-head valve four-stroke, horizontally opposed four-cylinder. The cylinder heads are liquid cooled. The cylinder barrels are air-cooled.

The 912 ULS has dual constant depression carburetors to regulate the air/fuel mixture, and a dual breaker-less, capacitor discharge ignition system to provide the electrical energy to the spark plugs.

The 912iS has a fully redundant electronic engine management system (EMS) controlling dual electronic ignition for the sparkplugs, dual electronic fuel injection, and dual power generation/distribution.

For engine maintenance and inspection requirements and procedures, refer to the Rotax Engine Type 912ULS or 912iS Series Line Maintenance and Heavy Maintenance manuals.

ENGINE SPECIFICATIONS

SUMMARY

Make	Rotax 912 ULS
Displacement	1352 cc
Ignition	Ducati Double CDI
Carburetor	Bing
Rated Horsepower	100 Hp @ 5800 RPM

● ***NOTE: THE ENGINE SPECIFICATION INFORMATION IS REFERENCED FROM THE ROTAX 912 SERIES, OPERATOR'S MANUAL, OM EDITION 4, REV.0.***

SUMMARY

Make	Rotax 912 iS Sport
Displacement	1352 cc
Ignition	Computer controlled electronic
Fuel Injection	Computer controlled electronic
Rated Horsepower	100 Hp @ 5800 RPM

● ***NOTE: THE ENGINE SPECIFICATION INFORMATION IS REFERENCED FROM THE ROTAX 912 SERIES, OPERATOR'S MANUAL, OM EDITION 1,REV.3.***

LUBRICATION AND CAPACITIES

ENGINE OIL

■ ***CAUTION: ONLY USE API CLASS 'SG' OR HIGHER.***

■ ***CAUTION: DO NOT USE OILS WITH FRICTION MODIFIER ADDITIVES.***

■ ***CAUTION: DO NOT USE OILS FOR "CONVENTIONAL" AIRCRAFT ENGINES.***

■ ***CAUTION: DO NOT USE OILS DESIGNED FOR DIESEL ENGINES.***

- **Capacity: 3 liter (3.2 US qts)**
- The type of oil to use will be based on the type of fuel used.
- Refer to the Rotax operator's manual and Service Instruction SI 912-016 for the appropriate engine model, to determine which oil type is appropriate for your operating temperatures and the fuel being used.

BRAKE FLUID

▲ ***WARNING: NEVER USE AUTOMOTIVE BRAKE FLUID.***

Use MIL-H- 5606A or MIL-PRF-83282 (preferred)
Brake fluid draining, flushing, and replacing instructions Page 7-5.

CAPACITY:
15.4 fl. oz. (US) (.455 liters)

ENGINE COOLANT

SUITABLE COOLANTS

COOLANT MIX:

- 50% ethylene glycol concentrate with anticorrosion additives designed for aluminum without sulfates or phosphates.
- 50% distilled or de-mineralized water.

See the latest version of the Rotax Operators Manual and Service Instruction SI 912-016 for further information on coolant types and limitations.

CAPACITY:

0.7 gallon (US) (2.6 liters)
Fully fill the expansion tank, and fill the over flow bottle midway between the 'min' and 'max' marks.

MINIMUM:

Fluid level at or above the minimum line on the overflow bottle when engine is cold.

FUEL

SUITABLE FUEL

91 AKI (premium unleaded automotive)
100 LL Aviation Fuel
See the latest version of the Rotax Operators Manual and Service Instruction SI 912-016 to determine other approved fuel types, limitations and maintenance considerations.

CAPACITY:

20.2 US Gallons (76.5 liters)

TIRE PRESSURES

Tire	psi	psi max	bar	bar max	kpa	kpa max
Nose	22	23	1.517	1.586	152	159
Main	25	28	1.724	1.931	172	193

TORQUE VALUES

Torque applied is for the size of the bolt shank not the wrench size. On smaller bolts use a torque wrench calibrated in inch pounds, not foot pounds.

When tightening fasteners installed with self-locking nuts or nutplates, the chart values must be modified. The friction drag torque must be determined and then added to the standard torque from the table. Due to the friction of the locking device noticeable torque, known as friction-drag (or prevailing) torque, is required just to turn the nut on the bolt threads and does nothing to actually tighten the parts together and stretch the bolt (clamp load). Run the nut down to where it nearly contacts the washer or bearing surface (at least one thread should protrude from the nut) then measure the friction drag torque required just to turn the nut. Add this friction drag torque to the standard torque (examples of standard torque values appear in the table below) to get the final (or total) torque. The final torque is the amount of torque to be applied to the joint. A snap-over type torque wrench should be set to the final torque.

For the **two blade prop**: refer to the latest version of the Sensenich INSTALLATION AND OPERATION MANUAL FOR JABIRU AND ROTAX ENGINES DOC#: 2A0.
For the **three blade prop**: refer to the latest version of the Sensenich INSTALLATION AND OPERATION MANUAL FOR ROTAX ENGINES DOC#: 3Y0R5.

Refer to the latest version of the Rotax Illustrated Parts Catalog for torque values and installation details regarding the 912ULS engine, and the line and Heavy Maintenance Manuals for the 912iS.

AN Bolt size	Bolt size - Threads per inch	Standard nuts AN310, AN315, MS20365	
		Inch pounds	Foot Pounds
AN3	#10-32	20-25	1.6-2.0
AN4	1/4-20	50-70	4.2-5.8
AN5	5/16-24 (with plain washers) 5/16-24 (with NORD LOCK washers)	100-140 220-240	8.3-11.6 18.3-20
AN6	3/8-24	160-190	13.3-15.8
AN7	7/16-20	450-500	37.5-41.7
AN8	1/2-20	480-690	40-57.5
AN9	9/16-18	800-1000	66.6-83.3
AN10	5/8-18	1100-1500	91.6-125

(Portions of this information has been adapted from AC 43. 13)

AN Bolt Size	Self-locking nuts MS21042-3, MS21042	
	Inch pounds	Foot Pounds
AN3	28	2.3
AN4	85	7.0

GENERAL PROCEDURES

TIRE REMOVAL	*REFER TO 5-1*
WING REMOVAL	
CANOPY REMOVAL	
COWL REMOVAL	*REFER TO 12-1*
OIL LEVEL CHECK	
FUEL SYSTEM DRAINING	*REFER TO 13-1*
FUEL TANK REMOVAL	

LIFTING & SUPPORTING THE FUSELAGE

▲ WARNING: USE STURDY SUPPORT STANDS THAT ARE EACH CAPABLE OF SUPPORTING AT LEAST 500 POUNDS.

■ CAUTION: AVOID CONTACTING ANTENNA, FAIRINGS OR OTHER ACCESSORIES WHILE PLACING THE SUPPORT STANDS UNDER THE AIRCRAFT.

■ CAUTION: REMOVE OR ATTACH THE WINGS PRIOR TO LIFTING AND SUPPORTING THE AIRCRAFT.

When the aircraft is lifted, whether or not a jack is used, the method of support is the same. Obtain two sturdy, padded stands each capable of supporting **at least** 500 pounds. The padded contacting surface must be **at least** 1 1/2 inches wide. Two layers of 3/8 inch carpet are recommended. Both stands need to be about 30 inches long and 25 inches high.

LIFTING WITH A JACK

■ ***CAUTION: USE APPROPRIATE JACK LOCATING FIXTURES TO ENSURE A STABLE JACKING SURFACE.***

■ ***CAUTION: INSTALL A JACKPOINT WHEN LIFTING AT THE WING TIE-DOWN LOCATION.***

1. Place a jack as necessary to lift at the lower end of the nose gear-leg.
2. Lift the front of the aircraft enough to position a stand along the lateral rivet pattern, centered directly between the boarding steps.
3. Remove the jack.
4. Place the jack as necessary to lift on the tail tie-down.
5. Lift the tail of the aircraft enough to position a stand along the lateral rivet pattern centered directly beneath the rear wing-spar receptacles.
6. Remove the jack.
7. Test stability of the aircraft. Grab the tail tie-down and test for horizontal and vertical stability. Stabilize as necessary.

LIFTING WITHOUT A JACK

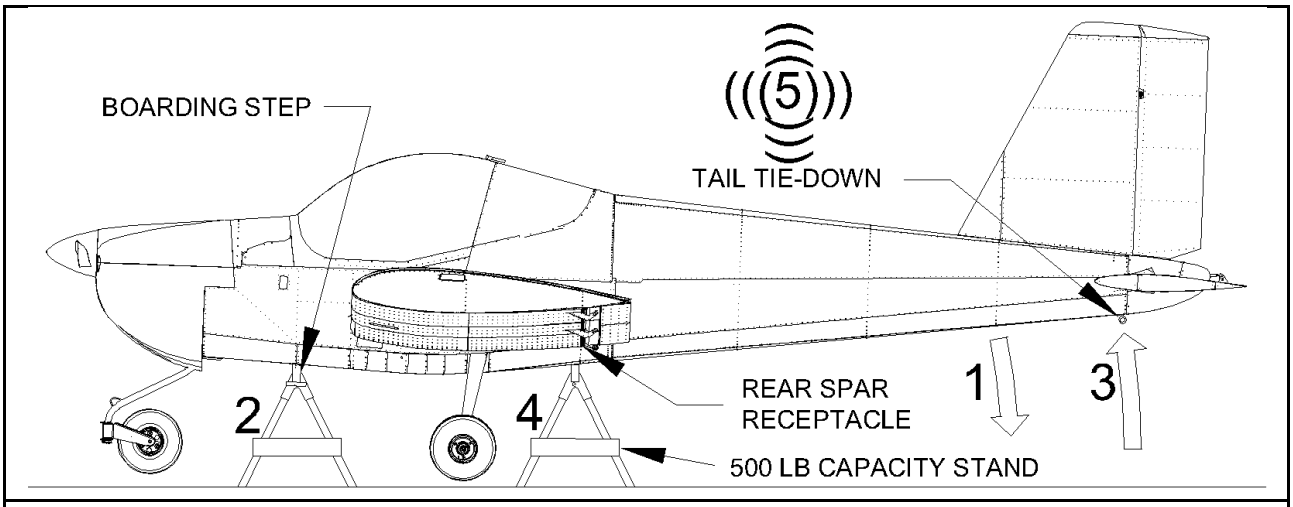

Figure 3: Lifting and supporting

● ***NOTE: STEPS 1 THROUGH 5 CORRESPOND TO THE NUMBERS IN FIGURE 3.***

1. Raise the nose of the aircraft by lowering the tail.
2. Place a 25 inch tall stand along the lateral rivet pattern, centered directly between the boarding steps.
3. Lift the tail of the aircraft.
4. Place another 25 inch stand along the lateral rivet pattern centered directly beneath the rear wing-spar receptacles.
5. Check for horizontal and vertical stability. Stabilize as necessary.

WEIGHT AND BALANCE

It is the pilot's responsibility to insure that the aircraft is loaded properly and within the weight and balance limitations. The weight and balance of the aircraft are factors that will affect all flight performance, and handling characteristics of the aircraft.

Find the actual licensed empty weight and CG of the aircraft on the Weight and Balance Form. This document is required to remain with the aircraft and must reflect any changes to the empty weight or CG. From that information and the instructions from the POH, the pilot can determine the useful load and proper load distribution for the aircraft.

Weight and Balance Procedure

1. Make a copy of the RV-12iS Weight & Balance Worksheet.
2. Drain all fuel from the tank.
3. Confirm that engine oil is at normal operating level.
4. Install both lower and upper cowl.
5. Check that all fairings, access covers/plates, etc. are fully installed.
6. Place seat cushions in the aircraft.
7. Check that there are no other items (tools, etc.) left in the cabin.
8. Roll aircraft onto 2 inch (5cm) blocks under main wheels and chock wheels.
9. Level the aircraft with reference to the canopy side rail/deck by inflating/deflating nose tire or main tires as appropriate or by increasing or decreasing block thickness.
10. Drop a plumb line off the leading edge of each wing just outboard of main wheel and mark a line on the floor between the two points.
11. Measure distance forward from left main wheel axle to the line on the floor and record on the RV-12iS Weight & Balance Worksheet as D1.
12. Measure distance aft from nose wheel axle to line on floor and record on RV-12iS Weight & Balance Worksheet as D2.
13. Measure distance forward from right main wheel axle to line on floor and record on RV-12iS Weight & Balance Worksheet as D3.
14. Roll aircraft off blocks under main wheels. Place blocks on scale pads for main wheels. Zero scales.
15. Roll aircraft onto scales using ramps. Verify canopy deck is level (adjust tire inflation if/as necessary), close the canopy.
16. Record the left main wheel weight on RV-12iS Weight & Balance Worksheet as W1.
17. Record the nose wheel weight on RV-12iS Weight & Balance Worksheet as W2.
18. Record the right main wheel weight on RV-12iS Weight & Balance Worksheet as W3.
19. On the RV-12iS Weight & Balance Worksheet, calculate empty weight, empty moment, and empty arm.
20. Enter values for Empty Weight, Empty Moment, and Empty Arm into the table on "YOUR AIRPLANE" table within RV-12iS Pilot Operating Handbook Section 6.
21. Place the RV-12iS Weight & Balance Worksheet in the aircraft as it is part of the required documentation.
22. Enter values for Empty Weight, Empty Moment, and Empty Arm onto the Weight and Balance Record page in this section.

RV-12iS WEIGHT & BALANCE WORKSHEET

AIRCRAFT: _____ (registration)_____ (serial number) DATE: _____

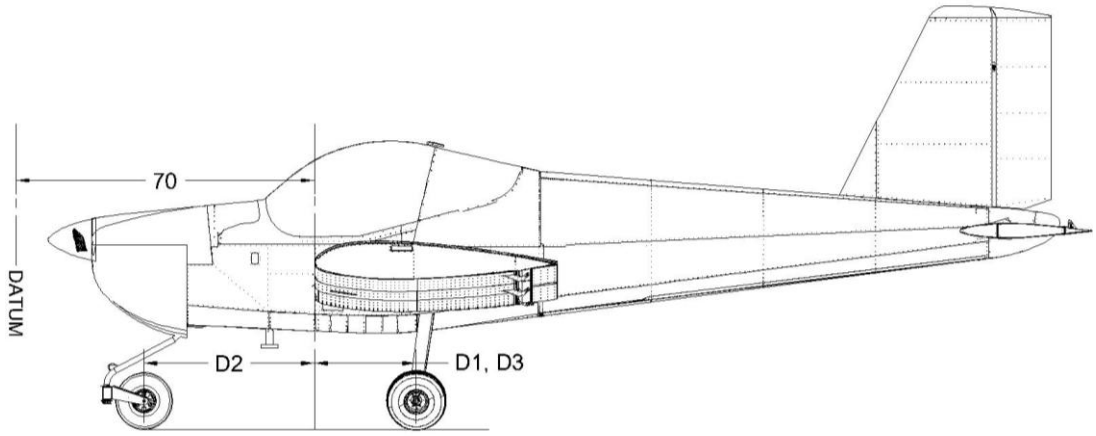

TABLE 1

	LEFT WHEEL	NOSE WHEEL	RIGHT WHEEL
WEIGHT	_____ lb (W1)	_____ lb (W2)	_____ lb (W3)
DISTANCE FROM AXLE CENTER TO LEADING EDGE	_____ inches (D1)	_____ inches (D2)	_____ inches (D3)

TABLE 2

	WEIGHT	ARM	MOMENT
LEFT WHEEL	_____ lb (W1)	(70+_____) = _____inches (D1) (A1)	(_____)*(_____) = _____ in-lb (W1) (A1) (M1)
NOSE WHEEL	_____ lb (W2)	(70-_____) = _____inches (D2) (A2)	(_____)*(_____) = _____ in-lb (W2) (A2) (M2)
RIGHT WHEEL	_____ lb (W3)	(70+_____) = _____inches (D3) (A3)	(_____)*(_____) = _____ in-lb (W3) (A3) (M3)

EMPTY WEIGHT = _____ lb (W1 + W2 + W3) EMPTY ARM = _____ inches (Empty Moment / Empty Weight)

EMPTY MOMENT = _____ in-lb (M1 + M2 + M3)

Aircraft measured, weighed, and worksheet filled-out by: _____
Printed Name/Title

_____
Signature

WEIGHT AND BALANCE RECORD

As of this date: ___/___/___ the following values represent current Weight and Balance Calculations.

Revised Empty Weight: _____ lb
Revised Empty Moment: _____ in-lb
Revised Empty Arm: _____ in

Signed: _____

As of this date: ___/___/___ the following values represent current Weight and Balance calculations resulting from the installation of the _____.

Revised Empty Weight: _____ lb
Revised Empty Moment: _____ in-lb
Revised Empty Arm: _____ in

Signed: _____

As of this date: ___/___/___ the following values represent current Weight and Balance calculations resulting from the installation of the _____.

Revised Empty Weight: _____ lb
Revised Empty Moment: _____ in-lb
Revised Empty Arm: _____ in

Signed: _____

As of this date: ___/___/___ the following values represent current Weight and Balance calculations resulting from the installation of the _____.

Revised Empty Weight: _____ lb
Revised Empty Moment: _____ in-lb
Revised Empty Arm: _____ in

Signed: _____

INSTALLED EQUIPMENT LIST

NOTE: Pages 1-23/24 and 1-25/26 correspond to a particular EFIS installation. Please remove all pages that do not correspond to your EFIS. Specific EFIS type is noted next to the page number.

ITEM	WEIGHT lbs	ARM in.	INSTALLED	MOMENT in-lbs.
DYNON SV-HDX1100	3.35	58.43		
DYNON (DUAL) SV-HDX1100	3.35	58.43		
DYNON SV-EMS-220/221	0.63	47.12		
DYNON SV-XPNDR-261	0.77	47.66		
DYNON SV-BAT-320	0.8	54.58		
DYNON SV-ADAHRS-200	0.5	142.22		
DYNON SV-GPS-2020	0.44	43.13		
GARMIN GTR 200	2.37	54.55		
GARMIN GTR 205x	2.8	54.55		
ACK 406	1.18	96.18		
ODYSSEY PC680 BATTERY	14.38	43.56		
EARTH X ETX900 BATTERY	4.9	43.56		
DYNON SV-ADSB-472	0.3	123.26		
DYNON SV AP / KNOB PANEL(s)	0.3	58.49		
DYNON AUTOPILOT SERVO (PITCH)	2	78.6		
DYNON AUTOPILOT SERVO (ROLL)	2	124.83		
TOTAL		--------		

SKYVIEW

INSTALLED EQUIPMENT LIST

ITEM	WEIGHT lbs.	ARM in.	INSTALLED	MOMENT in-lbs.
TRIG TY96	2.09	55.00		
TOTAL		--------		

SKYVIEW

INSTALLED EQUIPMENT LIST

NOTE: Pages 1-23/24 and 1-25/26 correspond to a particular EFIS installation.
Please remove all pages that do not correspond to your EFIS.
Specific EFIS type is noted next to the page number.

ITEM	WEIGHT lbs.	ARM in.	INSTALLED	MOMENT in-lbs.
GARMIN GDU 460	4.6	58.00		
GARMIN GMC 507	0.68	59.27		
GARMIN GEA 24	0.71	47.63		
GARMIN GTX 45R	2.9	51.51		
TCW IBBS-12V-3AH	1.125	55.31		
GARMIN GSU 25	0.48	119.00		
GARMIN GA 26X	0.42	42.93		
GARMIN GTR 200	2.37	54.42		
GARMIN GTR 205x	2.8	54.42		
ACK 406 ELT	1.18	133.25		
EARTH X ETX900 BATTERY	4.9	43.56		
GARMIN GA 36	0.5	42.93		
GARMIN AUTOPILOT SERVO (PITCH)	1.4	78.72		
GARMIN AUTOPILOT SERVO (ROLL)	1.4	125.75		
TOTAL		--------		

G3X

INSTALLED EQUIPMENT LIST

ITEM	WEIGHT lbs.	ARM in.	INSTALLED	MOMENT in-lbs.
GARMIN GMU11	0.16	142.26		
GARMIN GTN650Xi	5.5	54.02		
GARMIN GAD29	0.38	52.85		
GARMIN GMA245	1.78	55.57		
RAMI AV-532L	0.88	219.98		
TRIG TY96	2.09	55.00		
GARMIN G5	.83	54.44		
GARMIN GDU116B PFD	5.6	58.00		
GARMIN GDU116B MFD	5.6	58.00		
GARMIN GDU116NC PFD	6.5	58.00		
TOTAL		--------		

G3X

Chapter 2 - **SERVICE SCHEDULE**

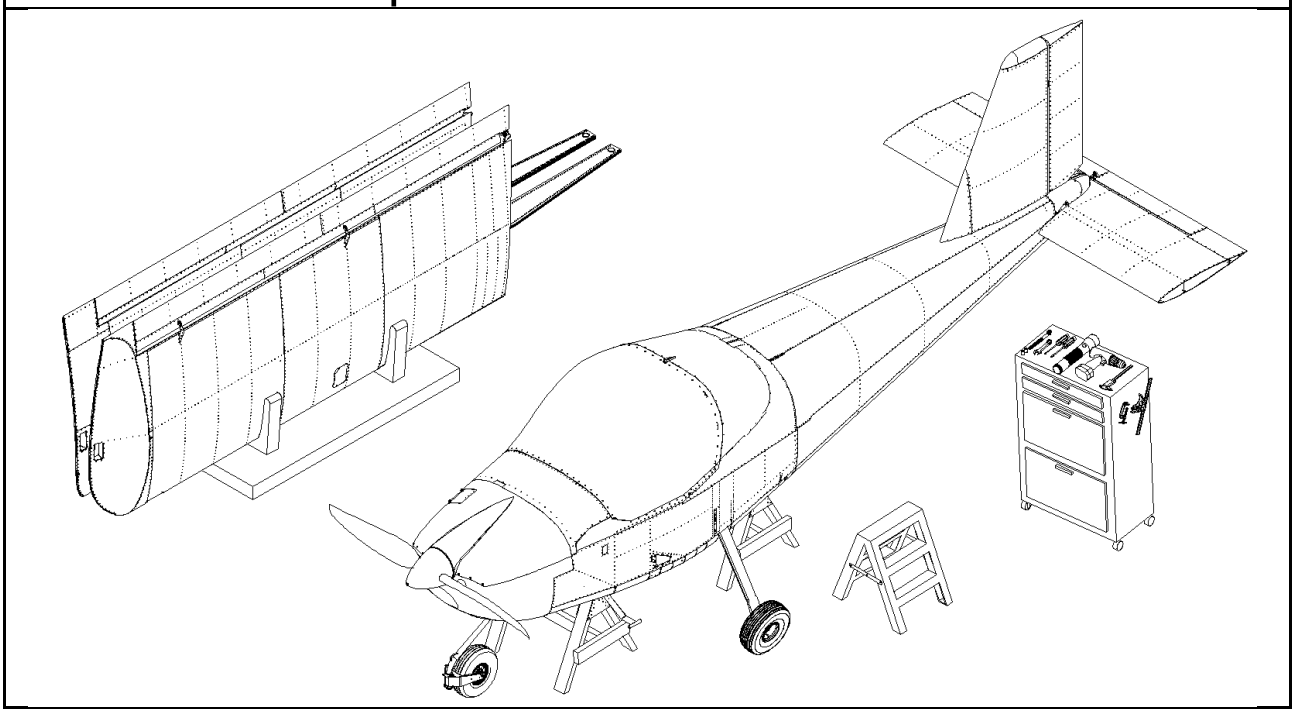

OVERVIEW

Adherence to the service schedule is essential for maintaining airworthiness and maximizing aircraft longevity. There are specific requirements for who can perform line maintenance, heavy maintenance, or annual condition inspections on an S-LSA.

● ***NOTE: OWNERS WHO POSSES A SPORT PILOT CERTIFICATE (OR HIGHER) ARE AUTHORIZED BY THE FAA TO PERFORM SOME LINE MAINT. TASKS. REFER TO FAR 43, APPENDIX A FOR GUIDANCE***

At least one of the following qualifications is necessary to perform **line maintenance** on an S-LSA RV-12iS:

- The owner or operator provided they are Sport Pilot certified or higher.
- A person certified as "Repairman (light-sport aircraft)-Maintenance rating"
- An FAA certificated A&P mechanic.

At least one of the following qualifications is necessary to perform **heavy maintenance** on an S-LSA RV-12iS:

- A person certified as "Repairman (light-sport aircraft)-Maintenance rating" with task specific training.
- An FAA certificated A&P mechanic.

All Inspection and maintenance practices and all inspection and maintenance log entries must be made in accordance with pertinent FARs and the manufacturers' specified requirements.

● ***NOTE: FOR THE SERVICE SCHEDULE CHECKLIST SEE SUPPLEMENT PAGE 18-3.***

The service schedule checklist serves as an index of the 'Service Procedures' section of each applicable chapter. The 'Service Procedure' section includes the recommended tools to complete each task. Applicable hardware will be stated using the most general terms. Refer to the KAI for the specific hardware size, location, and configuration. Manufacturers of third-party components determine service procedures for those components. The manual provided by the manufacturer for that component is the reference for service procedures. All component manuals are included with the aircraft at the time of purchase.

The 'What' column in the Service Schedule Checklist provides the name of the part or components to which the action applies.

The 'Action' column will indicate what is necessary; replace, lubricate, clean, charge, etc.

The 'When' column specifies the time or use interval that may elapse before the action is necessary.

The 'How' column will direct you to the chapter or manual that includes the instructions, tools, supplies, and the level of certification required of the person performing the action, for the given action.

Write the date of completion in the 'Service Date' column. Use the 'Initial' column to identify the person that performed the service.

Chapter 3 - INSPECTION

OVERSTRESS 3-1
OVERVIEW 3-2
INSPECTION DESCRIPTION 3-3
Special Tools 3-3
Pre-inspection / Post-inspection 3-3
Cockpit 3-5
Avionics 3-6
Communication 3-6
Transponder 3-6
Optional Equipment 3-7
Emergency Locator Transmitter 3-7
Propeller 3-7
Engine 3-8
Firewall Forward 3-8
Empennage 3-10
Vertical Stabilizer 3-10
Rudder 3-11
Stabilator 3-11
Anti-Servo Tab & Pitch-trim Servo 3-11
Fuselage 3-12
Landing Gear 3-13
Wing / Center Section 3-14
Rear Spar Doubler 3-15
Angle-Of-Attack System 3-16
Angle-Of-Attack/Pitot System 3-17
Paperwork 3-18

OVERSTRESS

In the event that the airframe's allowable flight load factor is exceeded, as indicated by the G Meter reading outside the parameters listed below, the airframe must be inspected for possible damage due to an overstress condition. This inspection must be performed by an individual with the minimum qualifications listed and an appropriate log book entry made. Damage caused by the overstress which affects airworthiness must be repaired before the next flight.

Category	Limit Load Factor
Light Sport Category	4.0g/-2.0g

Minimum Certification	LSA-RM or A&P
Additional References	KAI, POH (load factor)

OVERVIEW

The condition inspection is performed annually or every 100 hours of operation, depending on the terms of use for the aircraft. The condition inspection is essential for insuring safe operation throughout the aircraft's service life. In order for anyone to perform a condition inspection on an S-LSA category RV-12iS aircraft they must possess at least one of the following SPECIFIC CERTIFICATION REQUIREMENTS:

- A person certified as "Repairman (light-sport aircraft)-Maintenance" rating
- FAA certificated A&P technician

• NOTE: FOR THE INSPECTION CHECKLIST SEE SUPPLEMENT PAGE 18-7.

• NOTE: This maintenance manual is intended to be used in conjunction with the RV-12iS Kit Assembly Instructions (KAI) when completing maintenance or repair processes.

The inspector will identify any wear, corrosion or damage that would compromise the safe operation of the aircraft. All inspection practices must comply with the current Advisory Circular 43.13-1B regardless of the content of this manual.

During the inspection, locations concealed from direct line of sight may be accessible by touch or with use of a mirror. Inaccessible places do not require inspection provided the airframe has been constructed and used within the terms defined by the manufacturer.

The *Inspection Checklist* provided in the Supplement will be a guide for the inspection procedure. The bold print identifies each category of inspection and the general symptoms to check for throughout that category. Each category inspection item identifies specific things to check for with that item. Generally the items on the *Inspection Checklist* will correspond to the bulleted items in this chapter. It is always important to be generally observant to the condition of the aircraft regardless of what is specified for inspection.

During the inspection make note in the space provided or on a separate document of any discrepancies with parts, components or fasteners that require service or replacement. Complete the entire inspection prior to performing service or repairs. This chapter recommends tools that are useful for each inspection category.

INSPECTION DESCRIPTION

SPECIAL TOOLS	
♦ Wing Retention Pin Bushing Gauge ♦ Jack ♦ Padded stands ♦ Step ladder ♦ Tensile weight scale	♦ Multi-meter ♦ Compression tester ♦ Carburetor vacuum gauges ♦ Torque wrench (in/lbs & ft/lbs) ♦ Tire pressure gauge

PRE-INSPECTION / POST-INSPECTION

Perform the preliminary systems check and engine run-up as detailed in the *Inspection Checklist*. The Rotax line maintenance manual provides the run-up procedure for the engine. Test all of the engine systems and controls. Test all of the airframe systems and controls. Make note of any abnormalities or dysfunctional components. Record the applicable values in the spaces given on the *Inspection Checklist*. After the systems check, proceed with the following:

Service rating	Line
Minimum Certification	LSA-RM, or A&P

■ ***CAUTION: ALWAYS SUPPORT THE FLAPERON DURING WING REMOVAL AND STORAGE.***

1. Remove the left and right wing. (5-12)
2. Remove all access covers, inspection plates, fairing and cowling shown in **Figure 4**.

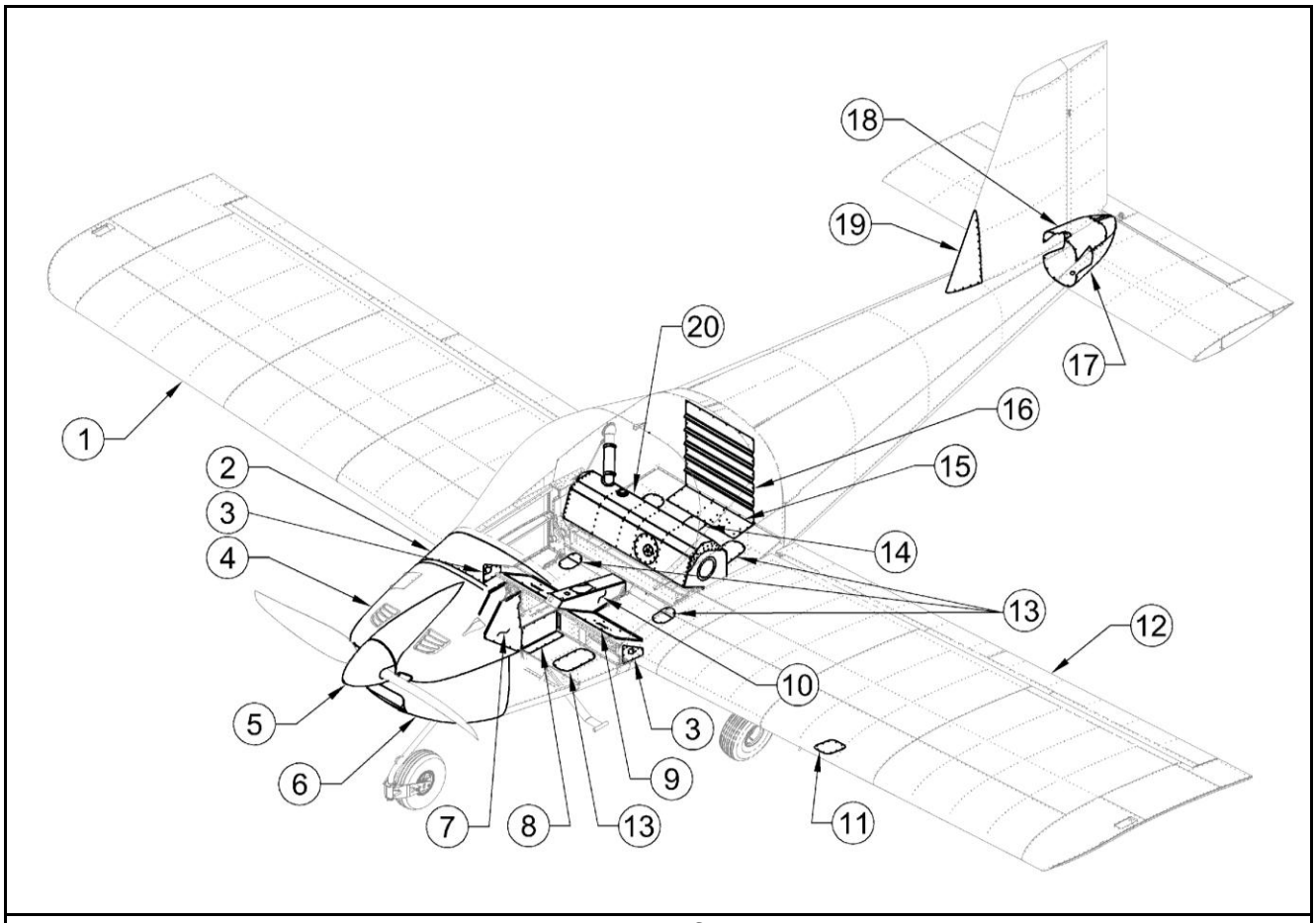

Figure 4: Remove for inspection

*Ref. #	Name	*Ref. #	Name
1	Right Wing	12	Left Wing
2	Upper Fwd Fuse Skin	13	Cover Plates (6)
3	Fuselage Side Cover (2)	14	Baggage Floor Cover
4	Top Cowl	15	Baggage Cover
5	Spinner	16	Baggage Bulkhead Corrugation
6	Bottom Cowl	17	Lower Tailcone Fairing
7	Tunnel Fwd Side Cover	18	Upper Tailcone Fairing
8	Tunnel Aft Side Cover	19	Forward Skin
9	Seat Floor Cover	20	Fuel Tank Assembly (see chapter 13 for draining the fuel tank)
10	Flap Motor Cover		
11	Access Hatch	* - Not numbered in order of removal	

3. Perform visual inspection for and make note of any oil, exhaust, fuel, hydraulic fluid leaks.
4. Thoroughly clean engine, fuselage, cockpit, undercarriage and other areas as needed to allow thorough inspection.
5. Throughout the inspection check for cracks, signs of fatigue, corrosion, wear, deformation, and/or failure. **Always check condition and security of all safe-tied fasteners**.

COCKPIT

- Inspect the aft face of the firewall for corrosion, deformation or cracks, especially around fasteners.
- Inspect the welded rudder pedal assemblies for cracks / damage, smooth movement with no heavy resistance, etc.
- Test the operation of the brake pedals. With constant pressure they should feel firm and not spongy. Without pressure, each brake pedal must automatically return to the original position. Check for hydraulic fluid leaks.
- Actuate the control stick forward and aft and left and right. Operation must be smooth from stop to stop. Verify freedom of movement of the pulleys and confirm that they turn smoothly and without lateral play. With the control stick pulled back the trailing edge of the stabilator must be up.
- Run a rag along the control cables to check for frays or broken strands that will snag the cloth. The stabilator cables must be aligned with the corresponding pulley and free from physical interference. Confirm that the locking clips on the tensioner barrels are installed and secure.
- Hold either control stick stationary and gently wiggle each push/pull rod; there must not be free play or loose parts. Check the rod-end jam nuts for proper torque and check the security of the rod-end connection fasteners.

- Make sure the stabilator contacts its up and down stops before the WD-1210 Control Column contacts it's up and down stops. If not, loosen and tighten the stabilator cable tensioner barrels an equal and opposite amount until the travel is full and correct. The control column stops must limit excessive forward and aft pressure. The bellcrank stops must limit the left and right control stick motion. See **Figure 5**.

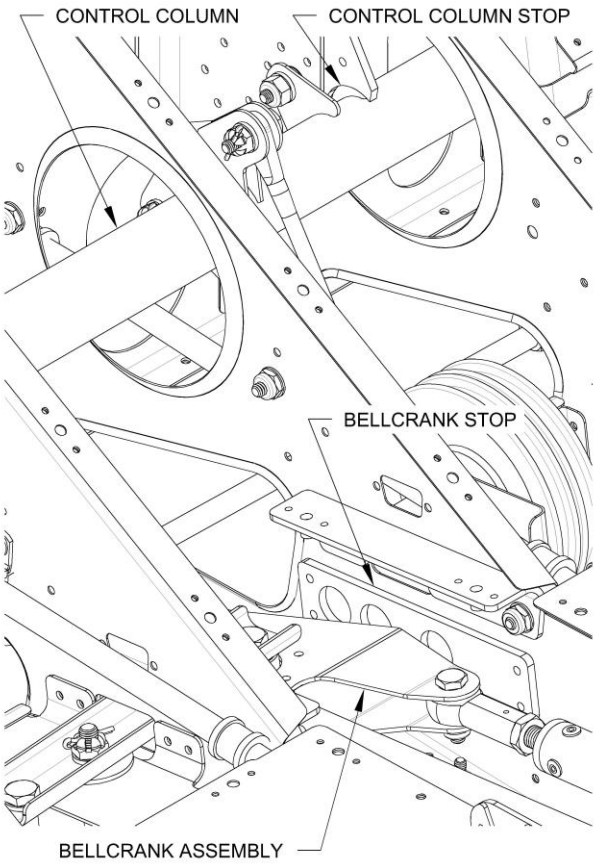

Figure 5: Control Stops

- Inspect each Seat Belt Harness latching mechanism, the condition of the webbing material, and all stitching for damage or wear.
- Check the installation, fasteners and condition of each seat back.
- Inspect the canopy windscreen and aft window for deterioration or breakage. The canopy latch and latch block must be in good condition and installed correctly. Test the security of the roll bar and check for any sign of fatigue. Check the canopy frame for cracks / security.
- Check that the control panel items are marked permanently, clearly, and correctly.
- Inspect all switch panel and instrument panel connections for security and condition.
- Check the condition of in-service fuses and the condition and presence of spare fuses.
- Actuate the vent door on each side of the cockpit and confirm that it seals properly when fully closed. Actuate each cabin heat push/pull control, confirm a clear passage to the cabin (when 'On'), and smooth operation. Confirm that the heat door has a tight seal to the firewall when each heat control is in the off position.
- Test the full motion of the engine throttle control for smooth operation and proper operation of the friction control.
- Test for proper operation of the fuel on/off valve. Confirm arm on valve moves to fully open position when on position of the control is selected. Leave valve in the off position.
- Inspect all wiring harnesses for signs of chaffing, insecurity, etc.
- Inspect all system lines (Fuel, Brake) for signs of leaks at all fittings, abrasion, etc.
- Inspect all Fuel System components for security and leaks.
- [ULS] Confirm fuel valve in the off position. Disassemble Gascolator for inspection and cleaning of filter screen. Re-safety at reassembly.
- [iS] Confirm fuel valve in the off position. Replace fuel filter at intervals specified in the Service Schedule Checklist

AVIONICS

- Check the connections, external condition, and installation of each component; the main unit, the antenna and the jacks. Check manufacturer's web site(s) for updates to operating software and install as appropriate.

COMMUNICATIONS

- Test the operation of the unit per manufacturer specs. (Refer to the Garmin or Dynon installation manual)

TRANSPONDER

- Make sure the transponder is in compliance with FAR 91.403 and confirm that there is a current maintenance log entry.

OPTIONAL EQUIPMENT

- Confirm that optional equipment installed on the aircraft is correct and authorized. Optional equipment is offered and installed on the aircraft by the manufacturer at the time of purchase. Refer to the related manual for special procedures for inspection. (See applicable manual provided with the component)

EMERGENCY LOCATOR TRANSMITTER

- The ELT must be inspected in compliance with the FAR Part 91.207 (d) and accompanied by a logbook entry. Refer to the manufacturer's documentation for battery replacement intervals for the ELT Remote Control Panel Indicator and for the ELT Audio Alert Indicator.

PROPELLER

(Refer to Sensenich Propeller manual for complete inspection requirements)

Special Tools	
♦ Torque wrench	♦ Blade pitch measuring tool

▲ WARNING: THE MASTER POWER AND BOTH IGNITION SWITCHES MUST BE SHUT OFF DURING INSPECTION OF THE PROPELLER. SERIOUS INJURY OR DEATH WILL RESULT IF ENGINE IS UNINTENTIONALLY STARTED BY TURNING THE PROPELLER.

- Check the spinner cone and back-plate fasteners for wear and security.
- Inspect hub and fasteners for cracks and wear.
- Check the pitot tube and bushing (if installed) for wear and condition.
- Check hub fastener torque.
- Inspect the leading edge of the blades for loose metal. Inspect each entire blade for cracks, missing material, and delamination.

● NOTE: PERFORM THE PROP TRACK TEST WITH THE SPARK PLUGS REMOVED.

- Test prop track by placing a stationary object in contact with the forward or aft face of one of the blade tips. Then rotate the propeller to bring the opposite blade to the same point. An off-track propeller will not come to the same point.

ENGINE

(Refer to Rotax manual)

▲ WARNING: THE MASTER POWER AND BOTH IGNITION SWITCHES MUST BE SHUT OFF DURING INSPECTION OF THE ENGINE, UNLESS INSTRUCTED OTHERWISE. SERIOUS INJURY OR DEATH WILL RESULT IF ENGINE IS UNINTENTIONALLY STARTED.

▲ WARNING: ALLOW THE ENGINE AND APPLICABLE COMPONENTS TO COOL BEFORE PERFORMING SERVICE OR INSPECTION. HOT ENGINE COMPONENTS WILL CAUSE SERIOUS BURNS.

- Refer to the Rotax line maintenance manual for proper inspection procedure for engine and components supplied with engine. The Rotax manual will also provide fluid check and change procedure.

FIREWALL FORWARD

▲ WARNING: THE MASTER POWER AND BOTH IGNITION SWITCHES MUST BE SHUT OFF DURING INSPECTION OF THE FIREWALL FORWARD COMPONENTS. SERIOUS INJURY OR DEATH WILL RESULT IF ENGINE IS UNINTENTIONALLY STARTED.

▲ WARNING: ALLOW THE ENGINE AND APPLICABLE COMPONENTS TO COOL BEFORE PERFORMING SERVICE OR INSPECTION. HOT ENGINE COMPONENTS WILL CAUSE SERIOUS BURNS.

Special Tools
♦ Multi-meter

- Note any signs of leakage, corrosion, and excessive temperature of components. Check for wear to hoses, cables, wiring harnesses, etc. as a result of vibration while in contact with another object.
- Check the forward side of the firewall, especially around components and fasteners, around the battery, oil tank assembly, cowl attach locations, engine mount, and nose gear. The firewall must not have any open passages into the cockpit.
- Inspect the engine mount for damaged coating, corrosion and signs of fatigue or cracks. Damaged engine mount coating demands closer examination and repair.
- Inspect the engine vibration isolators for cracks, deterioration and installation.
- Inspect the engine mount and vibration isolator hardware for damage and looseness.
- Check the engine compartment wiring, including ground wires of the wiring harness and battery. Wire insulation must be secure, intact and flexible; free from cracks, burns, or separation. All wire terminations must be tight.

- Check the battery for proper voltage, condition of the case, and that the connections are secure.
- Cabin heat cables and connections must be secure and operate smoothly. All SCAT ducting must be secure and in good condition. Heat valve doors must close tightly against firewall (when 'OFF').
- Check the engine throttle control cable for security and condition along the route to the firewall. The throttle must be securely connected to the throttle body and be in good condition. Confirm that the Throttle control operates the throttle body arm through its entire travel range from stop-to-stop.
- Inspect the air filter and SCAT hose for cleanliness, attachment and condition. Clean and re-oil the filter as required.
- Inspect the heat exchangers for proper attachment, cleanliness, condition, and signs of leakage. Inspect all mounting brackets and rubber isolators for security and cracks, and confirm fasteners are safetied.
- Evaluate the age of hoses and other rubber components in the engine compartment. All hoses and other rubber components provided with the engine have a service life defined in the Rotax maintenance manual. Service life of all other hoses and components are specified in the **Service Schedule Checklist**.
- The Pitot (if installed in spinner) and other flexible hoses or lines must be in good condition, connected and fastened securely, and no evidence of abrasion or wear along their length.
- Check the fuel and oil and coolant hoses for good condition; secure mounting, routing and tight connections.
- Check the muffler heat muff for damage and indications of abrasion wear on the outer surface of the muffler.
- Check exhaust system ball joints for proper anti-seize lubrication.
- Inspect the cowling for overall condition; loose paint, material separation, signs of wear. Check the cowl fasteners and hinges for missing eyelets, security. Check cowl shielding for signs of high temperature and proper attachment to cowl.

EMPENNAGE

- Inspect the exterior of the fuselage skins and fasteners. Check the fasteners by sighting along each rivet pattern for any inconsistent rivet profile among properly installed rivets as shown in **Figure 6**.

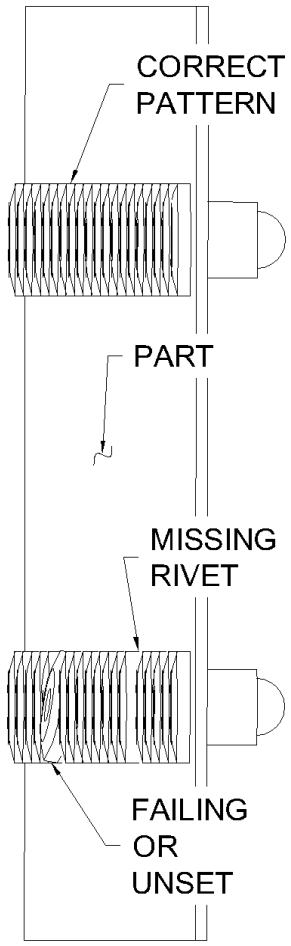

Figure 6: Rivet Inspection

VERTICAL STABILIZER

- Check the main skin and forward skin for deformation or cracks.
- Check the main skin fasteners by sighting along each rivet pattern for any inconsistent rivet profile among similar properly installed rivets.
- Check the forward spar and fasteners for cracks, deformation and signs of fatigue.
- Inspect the rear spar, spar fasteners, and hinges for cracks, deformation and signs of fatigue, especially the areas surrounding the rudder hinge brackets.

- Check the fiberglass fairing for condition and security.
- Check for interference or signs of wear from the rudder.
- Look through the forward spar lightening holes to inspect the rear spar, ribs, and rib flanges for cracks.

RUDDER

- Check the main skin for damage or deformation.
- Sight along each rivet pattern for any inconsistent rivet profile among similar properly installed rivets.
- Check the spar and hinge brackets for cracks, deformation and signs of fatigue, especially the areas surrounding the hinge brackets.
- Check the fiberglass fairing for condition and security.
- Check the rudder control horn for coating damage. Inspect for cracks, missing fasteners and deformation on the control horn and rudder bottom rib.
- Inspect the control cable swages, link fasteners and attach area on the control horn for signs of wear or fatigue.
- Check the rudder stops on the lower hinge for wear or deformation.
- Make sure the rudder swings smoothly.

STABILATOR

- Check the skins for damage or deformation.
- Check the main skin fasteners by sighting along each rivet pattern for any inconsistent rivet profile among similar properly installed rivets.
- Inspect the Anti-Servo Tab hinges, fasteners, and safety wire for wear and security.
- Inspect the spar box for cracks, deformation or signs of fatigue, especially the areas surrounding the control horns, hinge brackets, and counterbalance brackets.
- Use an Inspection mirror to inspect the ribs for cracks or deformation.
- Inspect the coating on the control horn brackets. If damaged, inspect for cracks.
- Inspect the control horns and fasteners for wear and security.
- Check the control cable fasteners for security and signs of wear.
- Check the counterbalance arm for straightness and for interior/exterior corrosion. Make sure the counterbalance weights are secure and the fasteners are in good condition.
- Inspect the hinge brackets, stops, and fasteners for signs of wear and security.
- The stabilator must swing smoothly and be limited only by the hinge stops. Make sure that both hinge brackets on the tail cone contact their corresponding hinge stop on the stabilator squarely and simultaneously, just prior to the control stick hitting its stops.

ANTI-SERVO TAB & PITCH-TRIM SERVO

- Check the anti-servo tab skins for damage or deformation.

  - Check the anti-servo tab fasteners by sighting along each rivet pattern for any inconsistent rivet profile among similar properly installed rivets.
  - Check the spar and attach hinge for deformation and signs of fatigue.
  - Inspect the control horns and surrounding area for deformation, cracks, and signs of fatigue. Check the control horn fasteners for wear and security.
  - Inspect the pitch-trim servo push rod and link for damage or signs of fatigue, and play in hardware connection points. There should be very little movement in the tab when the stabilator is held fixed.
  - Inspect the pitch-trim servo, and servo tray for deformation or cracks.
  - Check the fasteners and bushings that connect the pitch-trim servo tray to the tail cone for security and wear. There should be very little movement in the tab when the stabilator is held fixed.
  - Check the electrical connections and wire for condition and wear.
- Test the operation of the AST by actuating the stabilator through its full range of motion with the trim adjusted to the full nose up and full nose down settings. AST movement must be smooth and relative to the stabilator movement. There must not be any interference with the AST and the pitch-trim servo components at any point of the stabilator travel. Check the electrical connections and wire for condition and wear.

FUSELAGE

- Pay particular attention to the areas where the firewall attaches to the fuselage, each wing spar mates with the fuselage, the tailcone attaches to the forward fuse, and the empennage components attach to the tailcone.
- Visually inspect that both of the static ports are clear.
- Test the condition and security of the left and right boarding steps.
- Inspect the condition of the electrical connections that correspond to the wing. The connections must be free of corrosion and any damage.
- Inspect the inside diameter of each flaperon torque tube for rust/corrosion and verify that the UHMW plastic spacers are in place in the actuating arms of the flaperon torque tubes.

LANDING GEAR

▲WARNING: A LIFTED AIRCRAFT MUST BE SECURELY SUPPORTED BY STATIC STANDS OTHER THAN THE JACKING DEVICE. THE AIRCRAFT MAY NOT MOVE FROM ATTEMPT TO SHAKE HORIZONTALLY OR VERTICALLY.

■CAUTION: ALWAYS USE PADDED STANDS AND ALWAYS DISTRIBUTE THE LOAD ALONG A RIVET PATTERN WITH SEVERAL INTERSECTING RIVET PATTERNS.

●NOTE: REFER TO GENERAL – GENERAL PROCEDURES INDEX FOR INSTRUCTIONS ON LIFTING AND SUPPORTING THE AIRCRAFT.

Special Tools	
♦ Torque wrench	♦ Saw horses ♦ Tensile weight scale

- Check all landing gear components; attach locations, and fasteners for cracks and any other signs of fatigue. Throughout the inspection of the main landing gear, be observant for signs of hydraulic fluid leakage from the brake lines or fittings.
- Inspect each landing gear-leg and attach point. Check for evidence of black dust at the attach points which is an indicator of movement.
- Test the security of each of the landing gear-legs. The landing gear components may not have any free play in any direction.
- Check that all attach hardware is at proper torque. Remember to account for the prevailing torque of the nut. If a torque wrench is used on the head of the bolt also account for the torque to overcome the friction to turn the bolt shank within the assembly.
- Check the main U-1220 gear legs for corrosion or bubbled paint that may lead to corrosion.
- Test the security of the brake lines and inspect for signs of wear.
- Grab and shake the wheels and tires to check for bearing looseness.
- Check for smooth, low resistance rotation of each wheel.
- Check for excessive play in both brake calipers.
- Check the brake shoe linings, brake disc and wheel assembly per Matco manufacturer specifications.
- Use a straight edge to check that each unloaded gear-leg is straight, between the factory bends.
- Inspect the condition of fasteners and cotter pins at the location of all three wheel axles.
- Inspect the tires for cracks, wear, and tire pressure, and each valve and valve stem in good condition, and capped.
- Check the nose gear-leg coating, welds, and brackets for cracks and signs of

fatigue.

- Remove the nose fork from the nose gear leg. Clean and inspect for corrosion or wear. Re-lube and reinstall. Check the break-out force per KAI, and safety with a new cotter pin.

WING / CENTER SECTION

Special Tools	
♦ Wing retention pin bushing gauge	♦ Multi-meter

- Inspect the wing skins and fasteners for signs of damage or deformation. Check the fasteners by sighting down each rivet pattern for any inconsistent rivet profile among properly installed rivets. Any damage observed on the wing skins demands thorough inspection of the understructure of the damaged wing.
- Use a flashlight and an inspection mirror to inspect spars, ribs and attach angles on the interior of each wing. Especially the inboard-most ribs and ribs at the flaperon hinge attach points. The aft outboard portion of the wings can be viewed through the lightening holes in the outboard portion of the rear spar.
- Inspect the main spar, rear spar and stub spar for corrosion, deformation, signs of wear or fatigue. Inspect the rear spar and stub spar for lubrication at the inboard end.
- Inspect the flaperon condition and operation. Inspect the flaperon skins and fasteners for damage or deformation. The flaperon must swing smoothly without free play in any direction. Inspect the flaperon control connection for signs of wear. Check the fasteners in the flaperon hinge brackets on each wing for security. Inspect inner surface of flaperon torque tubes for rust and corrosion.
- Inspect the condition of the electrical connections that correspond to the fuselage. The connections must be free of corrosion and damage.
- Test the stall warning Vane (if installed) for freedom of movement. Check the micro-switch for corrosion, condition and security. Check the wing skin for cracks around the stall warning vane penetration.
- Test the AOA and Pitot (if wing-mounted) system plumbing for leaks. See the AOA System Test or AOA/Pitot System Test section below. All flexible hoses or lines must be in good condition, connected and fastened securely, and no evidence of abrasion or wear along their length.
- Check fuselage pin latching mechanisms for security and proper operation. Test warning circuit by moving each latch independently and verifying warning light.

- Inspect each fuselage pin and all wing retention pin bushings for wear or cracks. Inspect the center section area around the bushings for deformation or cracks. Use the Main Spar Bushing Gauge Pin to check the wear of both ends of all of the wing retention pin bushings. Insert the Gauge Pin into the bushing, and then rotate the Gauge Pin. The Gauge Pin is a 'go, no-go' device. If the 'no-go surface' contacts the bushing (or mounting surface), the wing retention pin bushing must be replaced. See **Figure** 7.

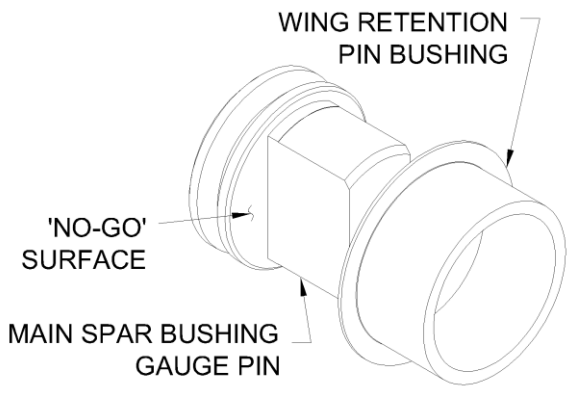

Figure 7: Wing Retention Pin Bushing

- Inspect the center section channel, bulkheads, fasteners and stiffeners for signs of damage or fatigue. Check the center section left and right UHMW retainer block and roller for security and wear.
- Check the fuselage pin latching mechanisms for security and proper operation. Test the warning circuit by unlatching each pin individually to verify it causes the switch panel warning light to illuminate.

REAR SPAR DOUBLER

- If the W-1207B rear spar doubler has been trimmed too much, the finished airplane may exhibit some play at the rear spar junction. This is usually discovered by hearing a "click" and detecting in/out movement when the wing is installed. Increasing the length of the spar doubler is not possible, so it must be removed and replaced with a different, slightly longer, part.
- To determine which part is required, measure the in/out movement of the wing. This will require two people.
- Begin by chocking the tires firmly, so the fully assembled airplane rocks and moves as little as possible.
- Attach a dial caliper to the inboard wing skin as shown below and adjust it so it just touches the side of the fuselage. (Use a spacer between the caliper and the wing skin, if necessary, to clear the rubber wing root seal). One person can rock the wingtip forward and aft while the other checks the indicator, and measures the total play.

- If the measurement is less than 0.050 no repair is required.
- If it is 0.050 or more refer to repair instructions in Section 5.

Figure 7.1: Inspect Rear Spar Doubler

ANGLE-OF-ATTACK SYSTEM TEST

NOTE: USE THESE PROCEDURES WHEN WORKING WITH A SPINNER-MOUNTED PITOT.

Special Tools	
♦ Syringes - two req'd (35cc or similar) ♦ Vacuum hose (or soft plastic tubing)	♦ Modeling clay

NOTE: IF EQUIPPED WITH FLF-00015 AOA WING ROOT RECEPTACLE, THE AOA SYSTEM PLUMBING MUST PASS THIS LEAK TEST DURING EVERY INSPECTION AND EVERY TIME THE WINGS ARE REMOVED AND INSTALLED.

IF EQUIPPED WITH FLF-00015-1, COMPLETE AOA SYSTEM TEST EVERY 24 CALENDAR MONTHS.

THE FLF-00015-1 CAN BE IDENTIFIED BY THE PRESENCE OF AN O-RING INSIDE THE AOA WING ROOT RECEPTACLE. THE FLF-00015 DOES NOT HAVE AN O-RING.

***WHEN PERFORMING ANY AOA, STATIC, OR PITOT SYSTEM PRESSURE TEST ON A DYNON SKYVIEW SYSTEM IT IS REQUIRED TO BE AT SOFTWARE VERSION 15.0.4 (OR GREATER) AND ALL TESTING MUST BE PERFORMED IN THE* SETUP MENU > HARDWARE CALIBRATION > ADAHRS CALIBRATION > PITOT/STATIC TEST MODE.**

After the AOA system has been properly calibrated in flight, this test is used to test the AOA system plumbing integrity, as required above.

- Using a 35cc syringe push plunger in to 7.5cc, hook-up syringe & vacuum hose to pitot tube, turn-on EFIS, use syringe to slowly, carefully push air into pitot, look for airspeed indication on EFIS, push-in syringe until 130 kts indicates then stop.
- Using a second syringe push plunger in to 7.5cc. Use modeling clay to hook-up the syringe and vacuum hose to the AOA port.
- Pressurize the AOA port. Watch the EFIS AOA indicator. Increasing AOA port pressure will cause the EFIS AOA indicator to move from green to red. Do not apply more pressure than necessary to move the AOA indication into the red zone. Once the AOA indication is in the red zone stop pushing in the syringe.
- Move the left wing tip back and forth while performing the AOA system leak test to verify AOA system integrity.
- The maximum allowable AOA system leak rate is less than full AOA indicator scale, from red to green, in one minute.
- If the AOA system does not hold test pressure for the required time inspect the modeling clay to wing seal before inspecting other AOA system components. Inspect and repair or replace any faulty AOA system components, as necessary. If faulty components were replaced or repaired re-test the AOA system plumbing integrity.

ANGLE-OF-ATTACK/PITOT SYSTEM TEST

NOTE: USE THESE PROCEDURES WHEN WORKING WITH A WING-MOUNTED PITOT.

Special Tools	
♦ Syringes - two req'd (35cc or similar) ♦ Vacuum hose (or soft plastic tubing)	

NOTE: THIS SYSTEM TEST MUST BE COMPLETED EVERY 24 CALENDAR MONTHS AND IS NOT REQUIRED WITH EACH WING REMOVAL/INSTALL.

After the AOA/Pitot systems have been properly calibrated in flight, this test is used to test system plumbing integrity, as required above.

- Remove left wing cover plate and detach push fittings from Pitot and AOA tubes, leaving the push fittings on the plastic flexible tubing.
- Attach a vacuum hose line to each of the push fittings and run both lines outside of the wing. Keeping track of which is Pitot and which is AOA.
- Push each syringe plunger in to 7.5cc and attach them to the open end of the vacuum hose lines.
- Using syringe, slowly and carefully push air into Pitot line, looking for airspeed indication on EFIS, push in syringe until 130 kts is indicated then stop.

- Move the left wing tip back and forth for one minute and check EFIS airspeed indication has not decreased more than two knots.
- If the Pitot system does not hold test pressure for the required time inspect the test vacuum line and syringe seals before inspecting other Pitot system components. Inspect and repair or replace any faulty Pitot system components, as necessary. If faulty components were replaced or repaired re-test the Pitot system plumbing integrity.
- Leaving Pitot tube pressurized to an EFIS indicated airspeed of 130 kts, slowly pressurize the AOA port while watching the EFIS AOA indicator. Increasing AOA port pressure will cause the EFIS AOA indicator to move from green to red. Do not apply more pressure than necessary to move the AOA indication to the first red bar.
- Move the left wing tip back and forth for one minute. Check that the AOA indication has not decreased from first red bar to green.
- If the AOA system does not hold test pressure for the required time inspect the test vacuum line and syringe seals before inspecting other AOA system components. Inspect and repair or replace any faulty AOA system components, as necessary. If faulty components were replaced or repaired re-test the AOA system plumbing integrity.

PAPERWORK

- Make the appropriate log book entries.
- Save the completed checklist in the aircraft file.

Chapter 4 **- STRUCTURAL REPAIRS**

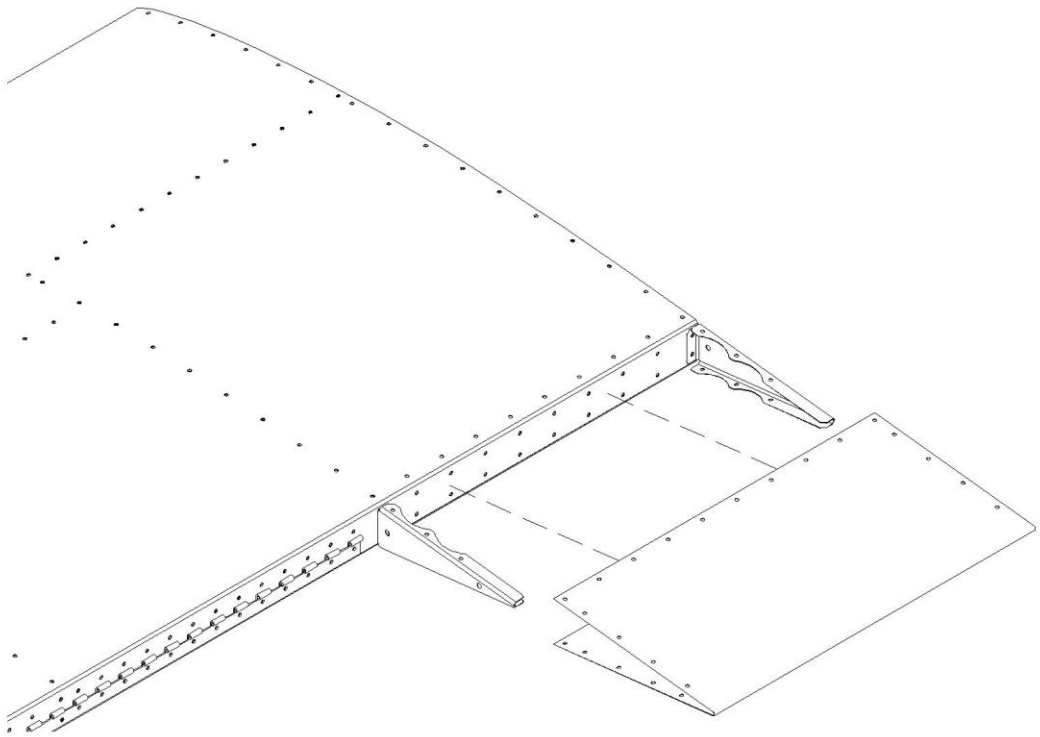

OVERVIEW

Visible deformation of or damage to any aircraft skin warrants a complete inspection of the underlying parts or structures. If all damaged parts are replaced in accordance with the Kit Assembly Instructions KAI no consultation of the manufacturer is necessary.

Small patch repairs to skins as outlined in AC 43.13 are allowed without consulting the aircraft manufacturer if the total patch area does not exceed 60 square inches. Repair to interior structural parts of the airframe or skin repairs (other than replacement of the entire skin or patches to skins) of more than 60 square inches are not allowed without consulting with the airplane manufacturer and receiving approval of the planned method of repair. Note: Integral stringers formed on the edge of skins are considered interior structure.

• NOTE: This maintenance manual is intended to be used in conjunction with the RV-12iS Kit Assembly Instructions (KAI) when completing maintenance or repair processes.

• NOTE: For more information regarding riveting, metal working, fiberglass, fluid fittings, priming, painting and more refer to the KAI Chapter 5; **Construction Materials, Processes & Useful Information.**

• NOTE: Stop drill cracks per AC 43.13. Report any cracks to Van's Aircraft using the feedback form found at the back of this manual.

MINIMUM CERTIFICATION

The minimum certification for completing a repair to aircraft skins is an LSA Repairman – Maintenance or an FAA certificated A&P technician. Refer to the KAI to identify individual parts and their corresponding part numbers.

Chapter 5 - **STRUCTURES**

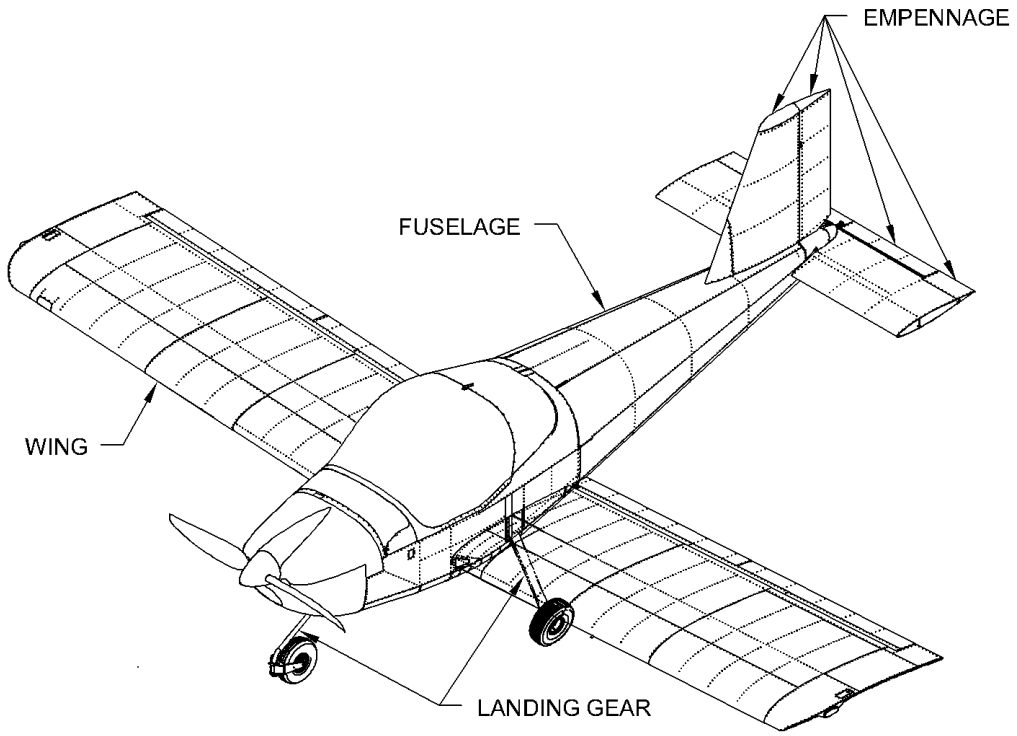

OVERVIEW 5-2
FUSELAGE..... 5-2
Components..... 5-3
WING AND FLAPERON 5-4
Components..... 5-5
EMPENNAGE..... 5-6
Components..... 5-7
LANDING GEAR..... 5-8
Components..... 5-9
NOSE WHEEL & GEAR LEG FAIRINGS5-10
Components..... 5-10
Wheel Fairings 5-11
Optional Components..... 5-11
SERVICE 5-12
Supplies 5-12
Special Tools 5-12
Expendable.....5-12
Replaceable.....5-12
General 5-13
Wing removal.....5-13
Installation 5-13
Wing retention pin bushing replacement...5-13
In Center Section:.....5-13
In Wing Spars:.....5-14
Canopy and frame removal 5-14
Installation 5-14
Main wheel and tire assembly removal.....5-15
Installation 5-15
Nose wheel and tire assembly removal 5-15
Installation 5-15
Main inner tube replacement 5-16
Nose inner tube replacement.....5-17
Flaperon hinge replacement.....5-17
Rudder hinge replacement 5-18
Stabilator hinge bearing replacement 5-19
Main gear removal.....5-21
Installation 5-21
Nose gear removal 5-21
Installation 5-22
Belt and Harness replacement 5-22
Canopy latch block replacement.....5-22
Step replacement 5-23
Rear Spar Doubler Replacement.....5-23
Service Schedule Procedures ... 5-25
Wing attach location lubrication 5-25
Fuselage pins.....5-25
Stub spar and Rear spar 5-25
AOA connector tube 5-25
Flaperon control connection lubrication 5-25
Flaperon bearings lubrication 5-26
AST attach hinge lubrication.....5-26
Nose wheel bearings replacement 5-26
Main wheel bearings lubrication 5-27
Nose fork pivot tension and lubrication.....5-27
Wheel Assem. Balancing Procedure 5-28

OVERVIEW

The RV-12iS airframe uses blind (pop style) rivets as the primary fastener. Screws, bolts and solid rivets are used where necessary. The wings are removable without the need of tools.

• NOTE: PRIOR TO PERFORMING STRUCTURAL REPAIRS READ CHAPTER 4 FOR LIMITATIONS.

• NOTE: THIS MAINTENANCE MANUAL IS INTENDED TO BE USED IN CONJUNCTION WITH THE RV-12iS KIT ASSEMBLY INSTRUCTIONS (KAI) WHEN COMPLETING MAINTENANCE OR REPAIR PROCESSES.

▲WARNING: BEFORE PERFORMING ANY MAINTENANCE OR REPAIRS TURN THE MASTER SWITCH 'OFF' AND DISCONNECT THE NEGATIVE (-) BATTERY CABLE FROM THE BATTERY.

FUSELAGE

The fuselage will be identified as the forward fuselage and the tailcone. The forward fuselage is the baggage bulkhead and all airframe parts forward to, and including, the firewall. The tailcone refers to all of the parts behind the baggage bulkhead, excluding the empennage fairing and empennage components.

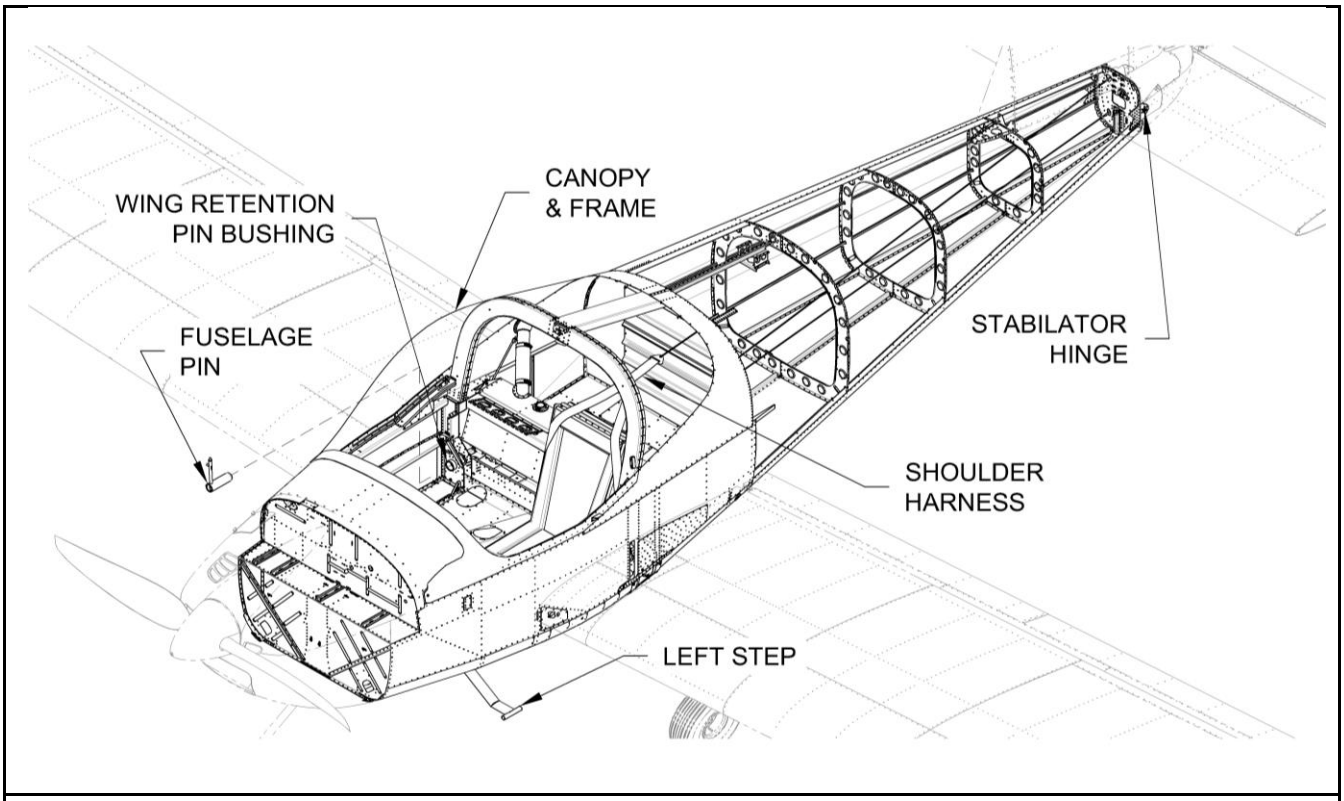

Figure 9: Fuselage

COMPONENTS

Quantity	Part or Assembly Name	Part Number or Reference
1	Canopy and Frame	C-1201 & WD-1219
1	Fuselage	Refer to KAI
2	Fuselage Pin	WD-1217
4	Wing Retention Pin Bushing	W-1206U
1	Latch Block	C-01205-3
2	Occupant Harness System	See shaded items below & Refer to KAI
1	Shoulder Harness	
1	Lap Belt	
1	Crotch Strap	
1	Left Step	WD-1233-L-1
1	Right Step	WD-1233-R-1

WING AND FLAPERON

The wing and flaperon are removable as an assembly from each side of the fuselage. Each wing mates to the fuselage at three points; the stub spar, the main spar and the rear spar. Two fuselage pins secure both main spars to the center section of the fuselage. The left wing has a stall warning sender and AOA sensor port installed. Electrical, AOA plumbing and control connections connect automatically during wing attachment. With the wing detached from the fuselage, the flaperon is removable.

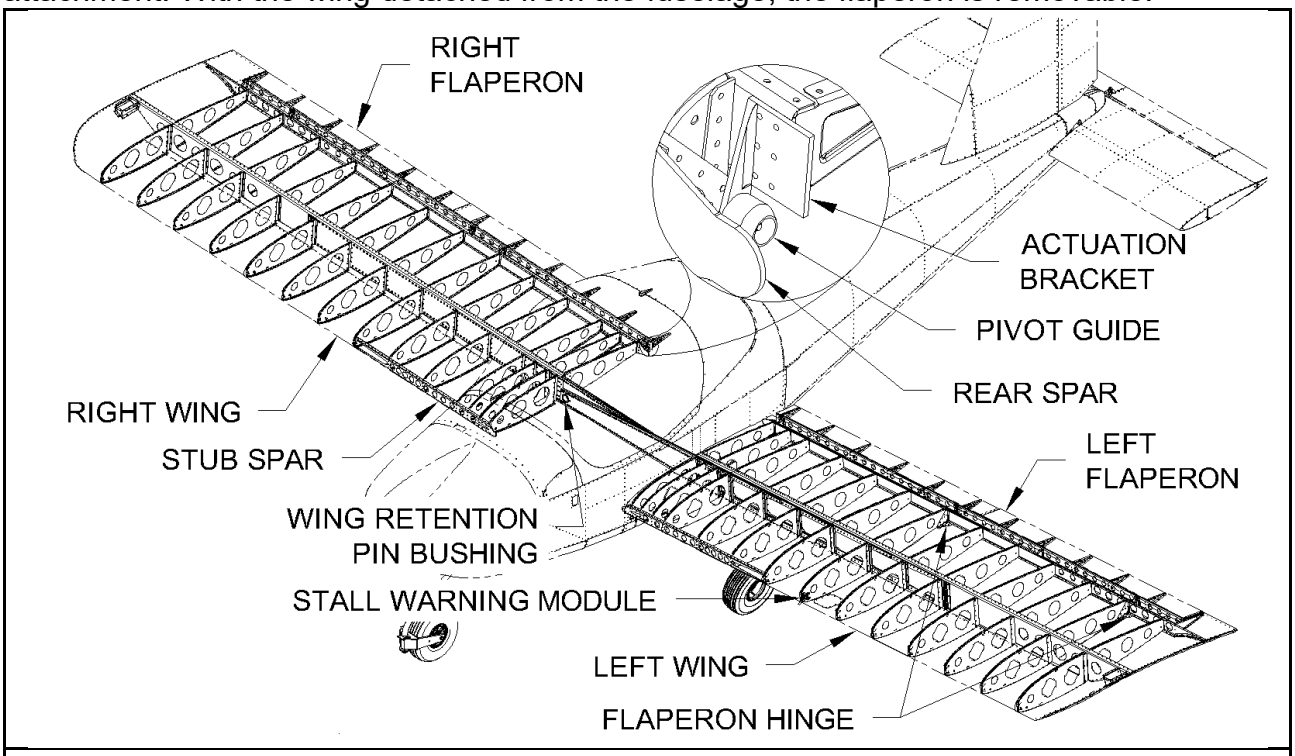

Figure 10: Wing and Flaperon

COMPONENTS

Quantity	Part or Assembly Name	Part Number or Reference
1	Left Wing	See shaded items below & Refer to KAI
2	Wing Retention Pin Bushing	W-1206U
1	Stub Spar	W-1208B-L / W-1208C-L
1	Rear Spar	W-1207A-L / W-1207B
1	Stall Warning	See 5-4 and KAI
1	Right Wing	See shaded items below & Refer to KAI
2	Wing Retention Pin Bushing	W-1206U
1	Stub Spar	W-1208B-R / W-1208C-R
1	Rear Spar	W-1207A-R / W-1207B
1	Right flaperon	Mirror of Left Flaperon (See below)
1	Left Flaperon	See shaded items below & Refer to KAI
2	Flaperon Hinge	MD3614M
1	Actuation Bracket	A-1207-L
1	Pivot Guide	A-1211

EMPENNAGE

The empennage components include the vertical stabilizer, rudder, anti-servo/trim tab, and stabilator assemblies. The vertical stabilizer front and rear spar attach to the tailcone. Fiberglass fairings finish the top of the vertical stabilizer, rudder and are optional on the ends of the Stabilator. The rudder is attached through hinges on the rear spar of the vertical stabilizer. The stabilator attaches to hinges on the aft bulkhead of the tailcone. The AST attaches to the rear of and operates in sequence with the stabilator. The AST also functions as a trim-tab.

Refer to the KAI for empennage component removal and installation.

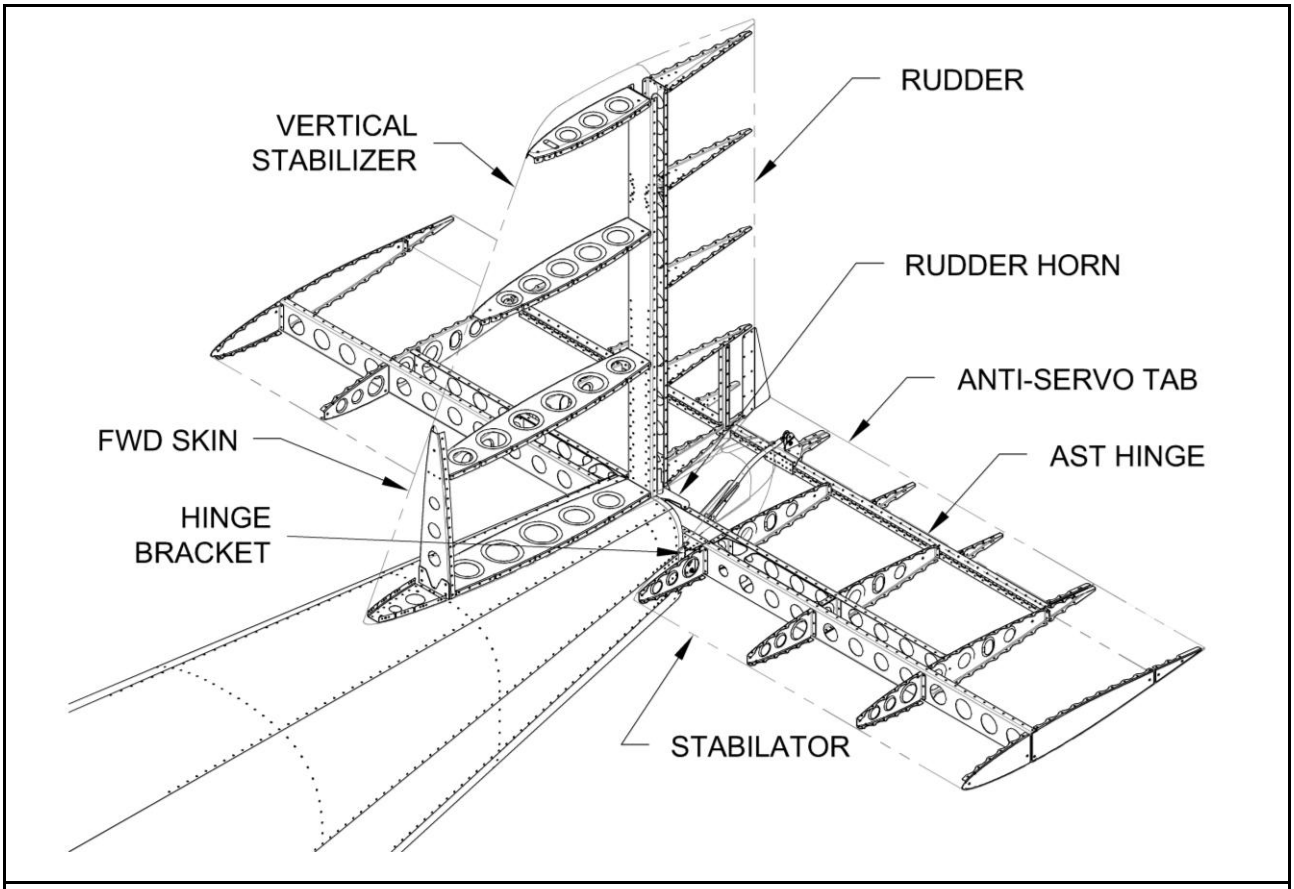

Figure 11: Empennage

COMPONENTS

Quantity	Part or Assembly Name	Part Number or Reference
1	Vertical Stabilizer	See shaded items below & Refer to KAI
1	Lower Hinge	VS-1210 / VS-1211A / COM-3-5
1	Upper Hinge	VS-1210 / VS-1211B / COM-3-5
1	Fwd Skin	VS-1204
1	Rudder	See shaded items below & Refer to KAI
1	Rudder Horn	WD-1205
1	Stabilator	See shaded items below & Refer to KAI
2	Hinge Bracket	HS-01231A-1 / HS-01231B-1 / HS-01231C-1
1	Anti-servo / trim tab	See shaded items below & Refer to KAI
2	AST Hinge	HS-1218A / HS-1218B

LANDING GEAR

The landing gear includes the gear-legs, wheels and tires, nose fork and mounting brackets. The nose gear-leg is steel, with welded brackets. The aluminum nose fork attaches and pivots at the lower end. An axle bolt and nut fastens the axle, spacers, and wheel and tire assembly to the nose fork. The main gear-legs are aluminum, fastened to the center section channel with brackets and bolts. Each main axle bolts to the lower end of each gear leg. All three tires are 5.00 x 5, either 4-ply or 6-ply tube type aircraft tires are acceptable.

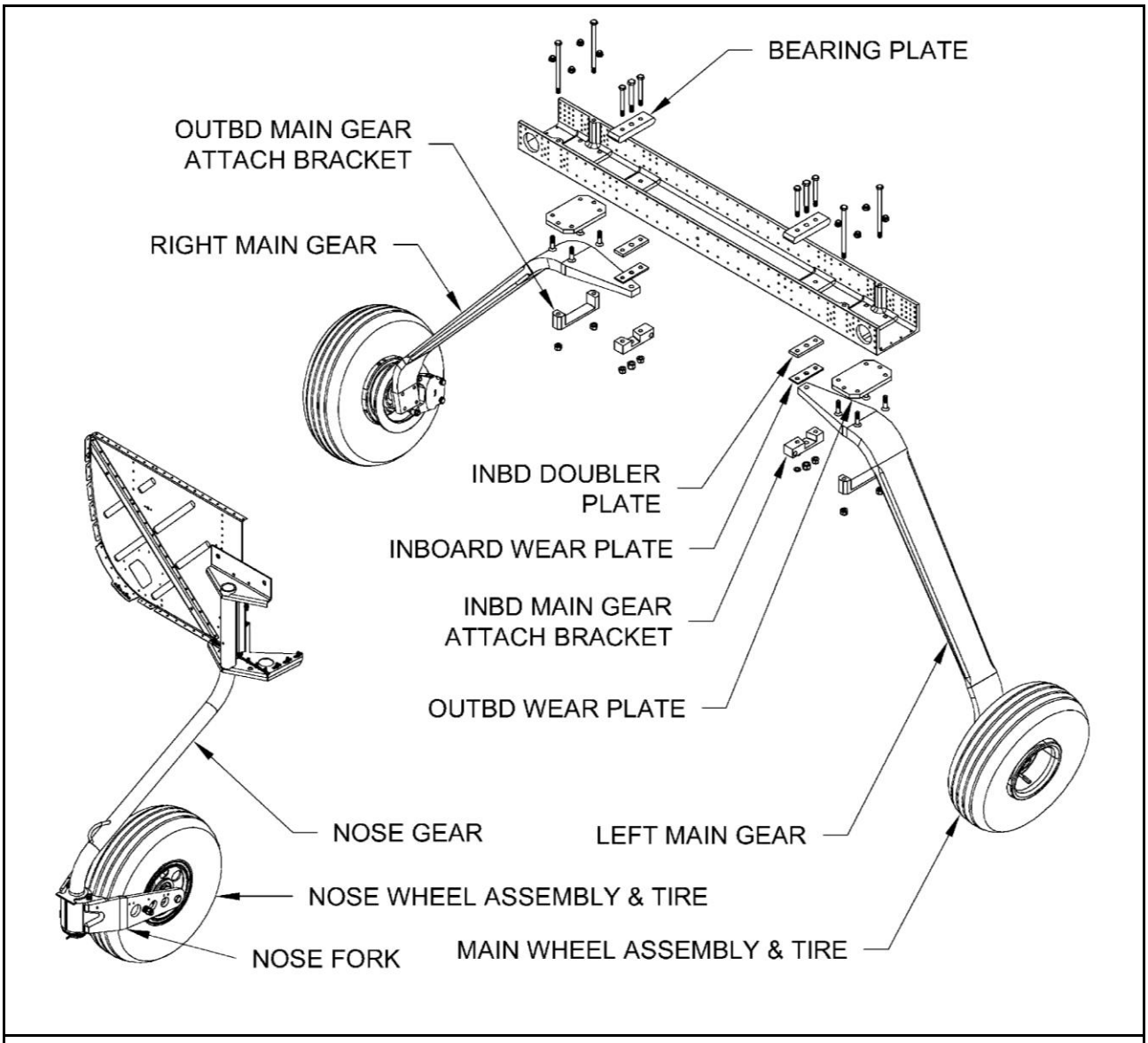

Figure 12: Landing Gear

COMPONENTS

Quantity	Part or Assembly Name	Part Number or Reference
1	Left Main Gear	U-1220-L
1	Right Main Gear	U-1220-R
2	Outbd. Main Gear Attach Brkt.	U-01202-1
2	Outbd Wear Plate	U-01202A
2	Inbd. Main Gear Attach Brkt.	U-01203-1
2	Inbd. Wear Plate	U-01203B-1
2	Doubler Plate	U-01203C-1
2	Inbd. Doubler Plate	U-01203E-1
2	Main Wheel assembly	See shaded items below
1	Main Wheel	U-MHMHE51B
2	Wheel Bearings	BEARING LM-67000L-A
1	Axle	MHE51B AXLE
1	Nose Gear	WD-1201
1	Nose Fork	WD-01230-1
1	Nose Wheel Assembly	See shaded items below
1	Nose Wheel	U-WHLNW51CC.625
1	Axle	U-1210A-1
2	Spacer	U-1210B-1
4	Wave Washer	5806-148-3
1	Wheel Bearing	N/A
3	Tire	U 5.00 X 5 TIRE
3	Tube	U 5:00X5-6IT

NOSE WHEEL AND GEAR LEG FAIRINGS

The optional nose wheel and gear leg fairings include the glass fabric/epoxy resin nose leg fairing, wheel fairing front and the wheel fairing aft. See **Figure 13**. The nose leg fairing is clamped about the nose leg using a piano hinge held in place by a single screw. The nose leg fairing is slotted to fit about the nose leg winching lug. The wheel fairing aft attaches to the wheel fairing front which in turn attaches to the nose fork. Tow bar access is provided by two 13/16 diameter holes in the wheel fairing front.

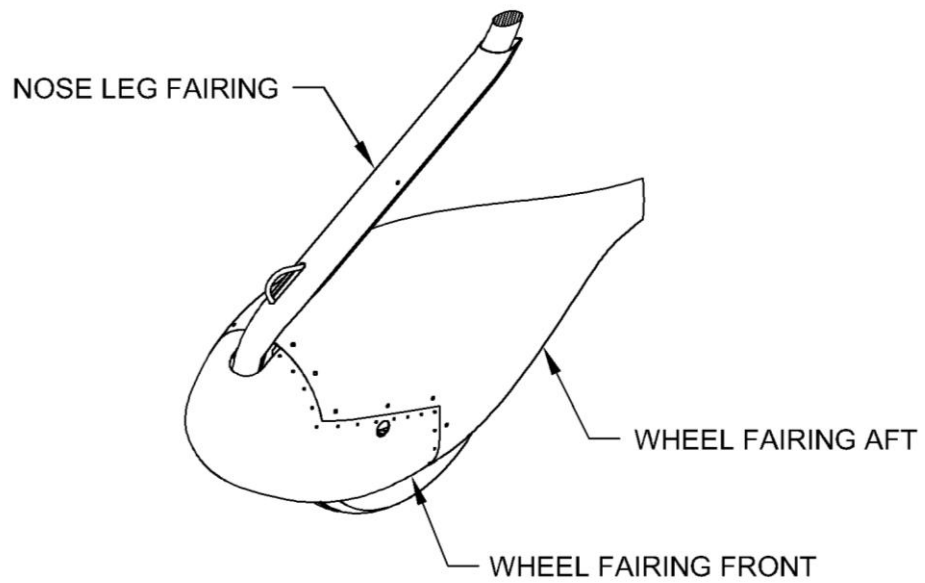

Figure 13: Nose Wheel and Gear Leg Fairings

OPTIONAL COMPONENTS

Quantity	Part or Assembly Name	Part Number or Reference
1	Wheel Fairing Front	U-00005A
1	Wheel Fairing Aft	U-00005B
1	Nose Leg Fairing	U-00007

WHEEL FAIRINGS

The optional main wheel fairings include the glass fabric/epoxy resin wheel fairing front and the wheel fairing aft. See **Figure 14**. The fairings are attached to the wheel fairing brackets which in turn attach to the bracket mount.

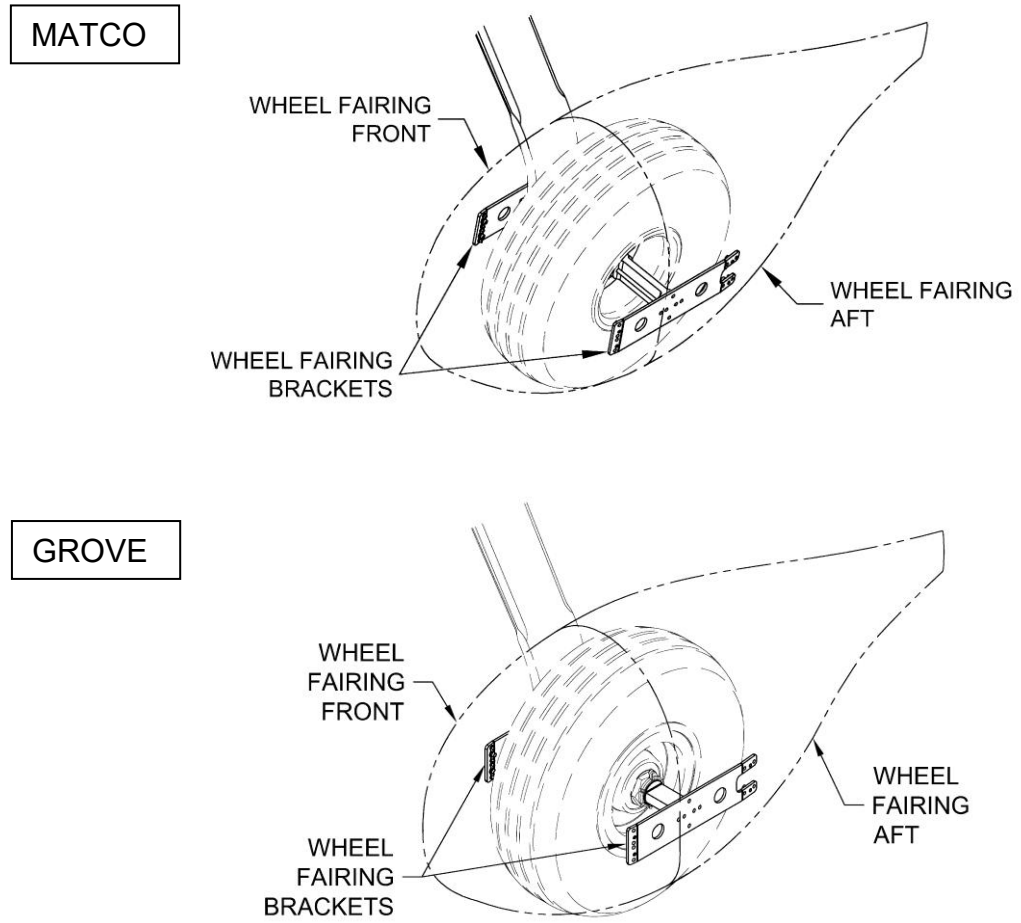

Figure 14: Main Wheel Fairings

OPTIONAL COMPONENTS

Quantity	Part or Assembly Name	Part Number or Reference
2	Wheel Fairing Front	U-00001A
2	Wheel Fairing Aft	U-00001B
4	Wheel Fairing Bracket	U-00002
2	Bracket Mount (inner) not shown	U-00003
2	Bracket Mount (outer)	U-00004

SERVICE

SUPPLIES

SPECIAL TOOLS	EXPENDABLE
• Tensile weight scale • 1/4 drive socket slightly less than 5/8in in diameter. (A common standard 7/16 socket generally works). • 3/8 drive, 3/4 socket • Hex Bolt 1/4 diameter 3 inches long (must be threaded at least 50% of its length) • 1/4 Flat Washer(2) and Hex Nut • #30 drill bit • Drill motor • 1/8" clecos and pliers • Blind rivet puller • Rivet squeezer & dies	• Cotter pins • Safety wire • Wheel bearing grease • Spray lubricant • Inner tube • Hydraulic fluid • Loctite • Silicone Grease • VA-204-1 Wing Root Seal
	REPLACEABLE
	• See component lists on page: ▪ 5-3 ▪ 5-9 • Canopy struts • Bearing MD3614M • Bearing DW4K2X • Nose wheel bearings • Main wheel bearings • Nose fork bushings • Pivot guide • Upper rudder hinge • Lower rudder hinge

GENERAL

WING REMOVAL

No special tools or certification required.
■ ***CAUTION: BE PREPARED WITH A HELPER OR SUPPORT STAND TO HANDLE THE WEIGHT AND AWKWARDNESS OF THE OBJECT TO BE REMOVED.***
■ ***CAUTION: ALWAYS SUPPORT THE FLAPERON DURING WING REMOVAL AND STORAGE.***

1. Retract the fuselage pin stopper on each fuselage pin and withdraw each of them only enough to release the right wing spar. (**Note: rotating the pin back and forth while pulling makes removal easier).**
2. Grasp the wing at the wing tip end, lift very slightly and pull while also holding the Flaperon, to remove it from the fuselage and set it aside.
3. Fully remove both of the fuselage pins.
4. Remove the left wing using the same procedure and set aside.

● ***NOTE: THE AOA AND PITOT SYSTEM PLUMBING MUST PASS A LEAK TEST DURING EVERY CONDITION INSPECTION AND EVERY TIME THE WINGS ARE INSTALLED AFTER REMOVAL IF EQUIPPED WITH FLF-00015-1. (3-16)***

INSTALLATION

1. Lubricate all wing attach and flaperon control locations as detailed on 5-26.
2. Installation procedure is the reverse of the removal procedure. (Install the left wing first, right wing second). The wing root seal strip on the side of the fuselage can be used to help align the wing at the proper angle of attack while inserting it into the fuselage. The root end of the flaperon must be properly aligned with the clevis portion of the flaperon torque tube for the wing to fully insert. **(Note: rotating the pin while pushing/hitting with the heel of your palm helps aid in pin insertion.)**
3. Complete the AOA leak test procedure, if required. (3-16)

WING RETENTION PIN BUSHING REPLACEMENT

Expendable	None
Replaceable	Wing Retention Pin Bushing
Service Rating	Line
Minimum Certification	LSA-RM, or A&P
Additional References	KAI

1. Remove the wings.

IN CENTER SECTION:

1. Tap out the bushing from the non-flanged end of the bushing.

2. Tap the new bushing into place with the flanged end toward the wing spars.

IN WING SPARS:

3. Tap out the bushing from the non-flanged end of the bushing.
4. Tap the new bushing into place with the flanged end to be on the forward side of the wing spar.

CANOPY AND FRAME REMOVAL

Expendable	None
Replaceable	Canopy and Frame Canopy struts
Service Rating	Line
Minimum Certification	LSA-RM or A&P
Additional References	KAI

■ CAUTION: BE PREPARED WITH A HELPER OR SUPPORT STAND TO HANDLE THE WEIGHT AND AWKWARDNESS OF THE OBJECT TO BE REMOVED.

1. Open and support the canopy. (Easiest with a partner)
2. Remove the lower support strut hardware; bolts (2).
3. Remove the pivot hardware; bolts (2), and bushings (2).
4. Remove canopy and frame.

INSTALLATION

1. Installation procedure is reverse of the removal procedure.

MAIN WHEEL AND TIRE ASSEMBLY REMOVAL

Expendable	Cotter pins Safety wire
Replaceable	None
Service Rating	Line
Minimum Certification	Owner **and** SPC, LSA-RM, or A&P
Additional References	Matco User Manual Grove User Manual KAI

1. Lift and support the aircraft. (1-16)
2. Remove the stationary brake shoe bolts (2), washers (2), spacer and brake shoe.
3. Remove the cotter pin, axle nut, washer and wheel and tire assembly.

INSTALLATION

1. Installation procedure is reverse of the removal procedure. Refer to the Matco User Manual for nut torque / bearing adjustment procedure.

NOSE WHEEL AND TIRE ASSEMBLY REMOVAL

Expendable	None
Replaceable	None
Service Rating	Line
Minimum Certification	Owner **and** SPC, LSA-RM, or A&P
Additional References	Matco User Manual KAI

1. Lift and support the aircraft. (1-16)
2. Remove the axle bolt, washers (2), nut, axle, spacers, wavy washers, and wheel and tire assembly.

INSTALLATION

1. Installation procedure is reverse of the removal procedure.

MAIN INNER TUBE REPLACEMENT – MATCO WHEEL (NOTE: THE MATCO WHEEL ASSEMBLY IS IDENTIFIABLE BY IT HAVING A WHEEL HUB THAT IS SEPARATE FROM THE TWO WHEEL HALVES)

Expendable	Inner tube Safety wire
Replaceable	Main wheel assembly Tire
Service Rating	Line
Minimum Certification	Owner **and** SPC, LSA-RM, or A&P
Additional References	Matco User Manual KAI

1. Lift and support the aircraft. (1-16)
2. Remove the main wheel and tire assembly. (5-15)
3. Remove the brake disc socket-head cap screws (3), and brake disc.
4. Deflate the inner tube.
5. Split the wheel assembly by removing the socket head cap screws (6), washers (9), and nuts (6).
6. Coat the replacement tube and tire interior with tire talc and install the replacement inner tube in the tire. Orient the valve stem to the hole in the wheel and the colored dot on the tire. Re-install the wheel in reverse of disassembly.
7. SLOWLY inflate the tire. Deflate it fully and re-inflate it SLOWLY a couple more times to work out any wrinkles in the tube. Inspect for a good seat around the wheel rim. For final inflation pressure see page 1-14.
8. Reassemble and install the wheel and tire assembly.

MAIN INNER TUBE REPLACEMENT – GROVE WHEEL (NOTE: THE GROVE WHEEL CAN BE IDENTIFIED BY HAVING BEARING HUBS THAT ARE INTEGRAL WITH THE WHEEL HALVES).

Expendable	Inner tube Safety wire
Replaceable	Main wheel assembly Tire
Service Rating	Line
Minimum Certification	Owner **and** SPC, LSA-RM, or A&P
Additional References	Grove User Manual KAI

1. Lift and support the aircraft. (1-16)
2. Remove the main wheel and tire assembly. (5-15)3.
3. Deflate the inner tube.
5. Split the wheel assembly by removing the AN bolts (3), washers (3), and nuts (3).
6. Coat the replacement tube and tire interior with tire talc and install the replacement inner tube in the tire. Orient the valve stem to the hole in the wheel

and the colored dot on the tire. Re-install the wheel in reverse of disassembly.
7. SLOWLY inflate the tire. Deflate it fully and re-inflate it SLOWLY a couple more times to work out any wrinkles in the tube. Inspect for a good seat around the wheel rim. For final inflation pressure see page 1-14.
8. Reassemble and install the wheel and tire assembly.

NOSE INNER TUBE REPLACEMENT

Expendable	Inner tube
Replaceable	Nose wheel assembly Tire
Service Rating	Line
Minimum Certification	Owner **and** SPC, LSA-RM, or A&P
Additional References	Matco user manual KAI

Lift and support the aircraft. (1-16)
1. Remove the nose wheel and tire assembly. (5-16)
2. Deflate the inner tube.
3. Split the wheel assembly by removing the bolts (3), washers (6), and nuts (3).
4. Coat the replacement tube and tire interior with tire talc and install the replacement inner tube. Orient the valve stem to the hole in the wheel and the colored dot on the tire.
5. SLOWLY inflate the tire. Deflate it fully and re-inflate it SLOWLY a couple more times to work out any wrinkles in the tube. Inspect for a good seat around the wheel rim. For final inflation pressure see page 1-14.
6. Reassemble and install the wheel and tire assembly.

FLAPERON HINGE REPLACEMENT

Expendable	Loctite 243 or Equiv.
Replaceable	Bearing MD3614M
Service Rating	Line
Minimum Certification	LSA-RM or A&P
Additional References	KAI

■ CAUTION: BE PREPARED WITH ADDITIONAL PERSONEL OR TOOLS TO HANDLE THE WEIGHT AND AWKWARDNESS OF THE OBJECT TO BE REMOVED.

1. Remove the wings. (5-13)

2. Make note of the flaperon hinge hardware configuration
3. Remove the flaperon hardware and flaperon assembly.

4. Measure and record the hinge bearing protrusion measurement as shown in **Figure 15**.

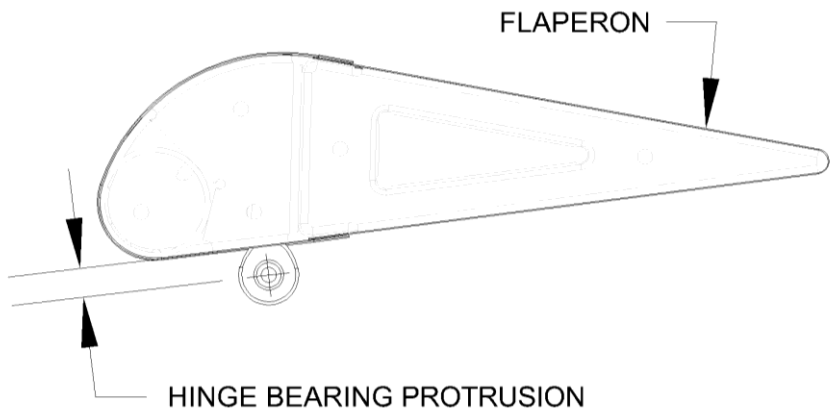

Figure 15: Flaperon hinge

5. Remove the flaperon hinge bearing from the wing.
6. Install the new flaperon hinge bearing to the same protrusion measurement after application of thread locker as detailed in KAI.
7. Install the flaperon assembly.

RUDDER HINGE REPLACEMENT

Expendable	None
Replaceable	Lower rudder hinge Upper rudder hinge
Service Rating	Line
Minimum Certification	LSA-RM or A&P
Additional References	KAI

■ CAUTION: BE PREPARED WITH ADDITIONAL PERSONEL OR TOOLS TO HANDLE THE WEIGHT AND AWKWARDNESS OF THE OBJECT TO BE REMOVED.

1. Remove the upper and lower tailcone fairing. (3-4)
2. Remove the rudder control cables and rudder assembly.
3. Remove, from the vertical stabilizer, the rudder hinge hardware (see below) and the rudder hinge to be replaced;
   - Upper hinge; bolt (4), washer (8)
   - Lower hinge; bolt (4), washer (4)

■ *CAUTION: UPPER AND LOWER RUDDER HINGES ARE NOT INTERCHANGABLE.*

4. Install the new rudder hinge and hardware.
5. Install the rudder assembly.
6. Install the upper and lower tail cone fairing.

STABILATOR HINGE BEARING REPLACEMENT

Special Tools	1/4 drive socket slightly less than 5/8in in diameter. (A common standard 7/16 socket generally works). 3/8 drive, 3/4 socket Hex Bolt 1/4 diameter 3 inches long (must be threaded at least 50% of its length) 1/4 Flat Washer(2) and Hex Nut
Expendable	Cotter pins Lock Clips (2) Loctite 648
Replaceable	Bearing DW4K2X
Service Rating	Line
Minimum Certification	LSA-RM or A&P
Additional References	KAI

■ *CAUTION: BE PREPARED WITH ADDITIONAL PERSONEL OR TOOLS TO HANDLE THE WEIGHT AND AWKWARDNESS OF THE OBJECT TO BE REMOVED.*

Removing the Stabilator

1. Remove the upper and lower tailcone fairing. (3-4)

● *NOTE: BEFORE DISCONNECTING THE STABILATOR CONTROL CABLES BE PREPARED TO PREVENT THE ENDS OF THE CABLES FROM FALLING INTO THE TAILCONE.*

2. Remove the two aft most belly inspection covers.
3. Remove the Lock Clips from one of the cable tensioners. Locking clips are one use only. Clips must be discarded after removal.
4. Rotate the tensioning barrel to slacken the stabilator control cables.
5. Disconnect the stabilator control cables.
6. Disconnect the aft end of the Trim/Servo Pushrod from the Anti-servo Tabs.
7. Remove the two bolts attaching the counter balance arm to the stabilator.

8. Remove the two bolts attaching the stabilator to the aft end of the tail cone.
9. Remove the stabilator assembly. Note: while extracting the counter balance arm from the fuselage, rotate the counter balance arm 90 degrees to allow it to pass through the aft tailcone bulkhead.

Bearing Replacement

10. Pressing out the bearing: Position the sockets on each side of the bearing then use the nut, washer and bolt inserted through both sockets and the bearing. Tighten the nut on the bolt to press the bearing towards the large socket. See **Figure 16**.

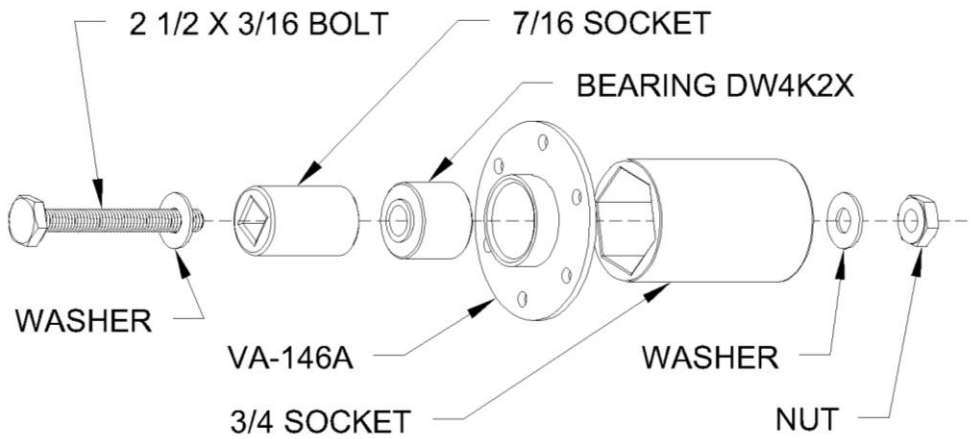

Figure 16: Extracting the DW4K2X bearing

11. Carefully clean the new bearing and the inner bore of the VA-146A Flange Housing using denatured alcohol. After cleaning, handle the bearings with care as to not re-contaminate the outer surface.
12. Insert a bearing into the VA-146A Flange Housing with minimal engagement just far enough that the bearing aligns itself with the center hole in the flange.
13. Place a bead of Loctite 648 onto the outer surface of the bearing around the entire circumference next to the edge of the VA-146A Flange Housing.
14. Pressing in the bearing: Using the same process as removing, use the small socket to press the bearing towards the large socket and into the VA-146A Flange Housing until the bearing is flush on both sides. Allow the Loctite sufficient time to cure per instructions on the package.
15. After reinstalling the stabilator readjust the stabilator control cable tensions in accordance with the KAI and install new lock clips on the adjuster barrel.

■ ***CAUTION: BE SURE TO RE-ORIENT THE COUNTERBALANCE ARM SO THAT THE COUNTERBALANCE WEIGHT IS POSITIONED CORRECTLY. REFER TO KAI***

MAIN GEAR REMOVAL

Expendable	Hydraulic fluid
Replaceable	Left Main Gear Leg Right Main Gear Leg Outbd. Main Gear Attach Brkt Outbd. Wear Plate Inbd. Main Gear Attach Brkt Inbd. Wear Plate and Spacer
Service Rating	Line
Minimum Certification	LSA-RM, or A&P
Additional References	KAI Matco or Grove Wheel user manual

1. Lift and support the aircraft. (1-16)
2. Remove the two outboard center section Cover Plates on the belly. (3-4)
3. Drain the hydraulic fluid. (7-5)
4. Disconnect the brake line at the main gear attach bracket.
5. Remove the center bolt, washer, and nut from the inboard main gear attach bracket.
6. Loosen the remaining inboard and outboard attach bracket hardware.
7. Remove the main gear-leg.

INSTALLATION

1. Installation procedure is reverse of the removal procedure.
2. Add hydraulic fluid and bleed the brake system.
3. Torque all landing gear attach hardware. Remember to account for prevailing torque.

NOSE GEAR REMOVAL

Expendable	Cotter pins
Replaceable	Nose Gear leg
Service Rating	Line
Minimum Certification	LSA-RM, or A&P
Additional References	KAI

1. Remove the top and bottom cowl. (3-4)
2. Lift and support the aircraft. Add an additional support under the aft end of the tail cone to stop the aircraft from tipping back when the engine is lifted (1-16)

▲ *WARNING: DO NOT REMOVE THE UPPER VIBRATION-ISOLATOR BOLTS.*

3. Use an engine hoist to support the engine weight, by slinging at the engine mount directly behind the aft top of the engine case.

4. Remove the lower engine vibration-isolator bolts (2).
5. Remove the nose gear-leg to fuselage attach bolts (13), and washers (13).

● ***NOTE:** THE ENGINE CAN BE LIFTED BY HAND AT THE GEARBOX.*

6. Lift the front of the engine only enough to remove the engine weight from the gear-leg bracket.
7. Remove the nose gear-leg.

INSTALLATION

1. Lift the front of the engine only enough to provide room behind the engine mount for the nose gear-leg.
2. Install the nose gear-leg and attach hardware.
3. Install the lower engine vibration isolator bolts.

BELT AND HARNESS REPLACEMENT

Expendable	None
Replaceable	Occupant Harness
Service Rating	Line
Minimum Certification	Owner **and** SPC, LSA-RM, or A&P
Additional References	KAI

▲ ***WARNING:** HARNESS PARTS THAT SHOW ANY SIGN OF WEAR REQUIRE THAT THE ENTIRE HARNESS SET BE REPLACED IMMEDIATELY.*

1. Remove the seat ramp cover by sliding it outboard from under the center console flange. (3-4)
2. Remove the crotch strap; bolt, bushing, washer, nut.
3. Remove each waist strap (2); bolt, bushing, washer, nut.
4. Remove the shoulder straps; bolt, bushing, washer, nut.
5. Install the new harness set and attach hardware.

CANOPY LATCH BLOCK REPLACEMENT

Expendable	None
Replaceable	Latch Block
Service Rating	Line
Minimum Certification	LSA-RM, or A&P
Additional References	KAI

1. Remove the latch block attach screws (3), shims (in installed), and the latch block.
2. Install the new latch block and attach hardware in same orientation as when removed.

STEP REPLACEMENT

Expendable	Fuel tank sealant
Replaceable	Left or Right Step
Service Rating	Line
Minimum Certification	Owner, LSA-RM, or A&P
Additional References	KAI

1. Remove the step attach bolts (2), washers (2) and the step.
2. Install the new step and attach hardware.
3. Seal the gap between the step and the fuselage skin around the entire perimeter with fuel tank sealant.

REAR SPAR DOUBLER REPLACEMENT

Special Tools	#30 drill bit, drill, clecos, rivet puller, rivet squeezer & dies
Expendable	Fine file
Replaceable	Left or Rt. Rear Spar Doubler
Service Rating	Line
Minimum Certification	LSA-RM, or A&P
Additional References	KAI

1. Based on the measurement from Section 3 Inspection, choose one of the replacement W-1207B-x rear spar doublers. There are four different parts available, ranging from 0.025 to 0.055 longer than the original, in increments of 0.010 — (i.e.: W-1207B-25 is 0.025" longer than stock.) Note that a pattern of holes punched in the inboard end indicates the size – one extra hole is the first oversize then two, three and four holes are used to identify each progressively longer part.
2. Prepare the doubler by filing the rounded end just enough to remove the rough surface left from manufacture, no more.
3. Prime the doubler if/as desired.
4. Remove the wing and remove the rivets attaching the W-1207B rear spar doubler, W-1212 and hinge assembly to the rear spar. See KAI Section 5.4.

5. Final drill the holes in the new doubler to #30 (except the identifier holes) and cleco it to the rear spar.
6. Test fit the wing with the new doubler clecoed in place (the hinge assembly does not need to be in place for this step.) If the fit is too tight to allow normal Spar Pin insertion, remove the wing, un-cleco the doubler and file the contour of the curve to reduce its profile by a few thousandths of an inch and test fit again.
   Note: When reducing the length, the primary material removal will be on the inboard end (tip), and reducing the amount around the radius so that no material is removed from the top or bottom. Repeat until the correct fit is achieved.
7. Rivet the doubler and hinge assembly to the spar as shown below

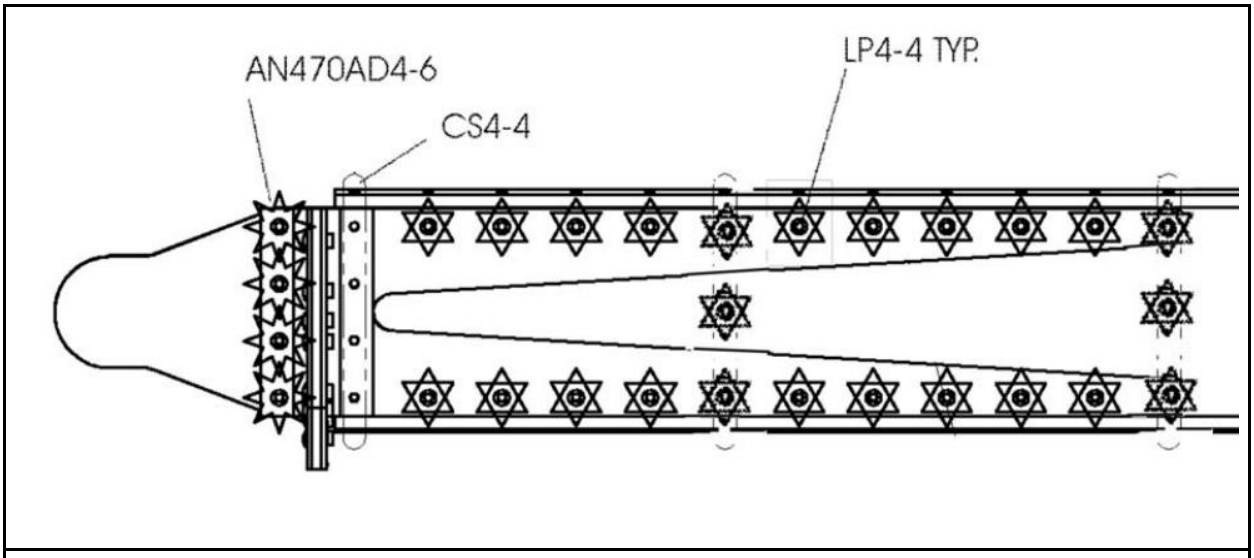

Figure 16.1: Rear Spar Doubler Replacement

SERVICE SCHEDULE PROCEDURES

WING ATTACH LOCATION LUBRICATION

(WINGS REMOVED)

Expendable	Wheel bearing grease Anti-seize compound Silicone Grease
Replaceable	Fuselage Pin AOA Connector Tube
Service Rating	Line
Minimum Certification	Owner **and** SPC, LSA-RM, or A&P
Additional References	KAI

FUSELAGE PINS

1. Wipe clean, the fuselage pins (2).
2. Wipe clean, the wing retention pin bushings (8).
3. Apply grease lubricant sparingly to the shaft of each fuselage pin.

STUB SPAR AND REAR SPAR

1. Wipe clean, the inboard end of the stub spar and rear spar of each wing. (5-4)
2. Apply anti-seize compound sparingly to the inboard end of the stub spar and rear spar of each wing.

AOA ALUMINUM CONNECTOR TUBE

1. Wipe clean and apply a thin coating of silicone grease (avoid getting any grease in the interior of the tube (5-4)

FLAPERON CONTROL CONNECTION LUBRICATION

(WINGS REMOVED)

Expendable	Wheel bearing grease
Replaceable	None
Service Rating	Line
Minimum Certification	Owner **and** SPC, LSA-RM, or A&P
Additional References	KAI Wing removal (5-13)

1. Wipe clean, the UHMW pivot guide and actuation bracket of each flaperon. See page 5-4, Figure 10.
2. Apply lubricant sparingly to the UHMW pivot guide and actuation bracket of each flaperon.

FLAPERON BEARINGS LUBRICATION

Expendable	Spray lubricant
Replaceable	None
Service Rating	Line
Minimum Certification	Owner **and** SPC, LSA-RM, or A&P
Additional References	KAI Flaperon hinge replacement (5-17)

1. Wipe away any dirt accumulation from each of the flaperon bearings (3).
2. Apply lubricant sparingly to each of the flaperon bearings.
3. Allow lubrication to penetrate while moving the Flaperon a few times through its range of travel. Wipe away excess.

ANTI-SERVO TAB ATTACH HINGE LUBRICATION

Expendable	Spray lubricant
Replaceable	None
Service Rating	Line
Minimum Certification	Owner **and** SPC, LSA-RM, or A&P
Additional References	KAI

1. Lower the Anti-Servo Tab by adjusting the trim. Lower the trailing edge of the stabilator.
2. Wipe away any dirt accumulation from the AST attach hinges.
3. Apply lubricant along the top of the left and right AST attach hinges.
4. Allow lubrication to penetrate for a minute. Wipe away excess.

NOSE WHEEL BEARINGS REPLACEMENT

■ ***CAUTION: THE NOSE WHEEL BEARINGS ARE NOT SERVICEABLE PARTS.***

Special Tools	Small wooden dowel, 1/2 - 1 inch dia. Mallet
Expendable	None
Replaceable	Wheel bearings
Service Rating	Line
Minimum Certification	Owner, LSA-RM, or A&P
Additional References	Matco user manual

1. Lift and support the aircraft. (1-16)
2. Remove the nose wheel and tire assembly. (5-16)
3. Deflate the inner tube.
4. Split the wheel and tire assembly by removing the bolts (3), washers (6), and nuts (3).
5. Remove the wheel bearing from the inside of each wheel half using the dowel to

tap around its outer perimeter.
6. Press a new wheel-bearing into each wheel half by reversing the process.
7. Reassemble the wheel and tire assembly.
8. SLOWLY inflate the tire. Deflate it fully and re-inflate it SLOWLY a couple more times to work out any wrinkles in the tube. Inspect for a good seat around the wheel rim. The final inflation pressure is 22 psi.
9. Install the wheel and tire assembly.

MAIN WHEEL BEARINGS LUBRICATION

Expendable	Wheel bearing grease
Replaceable	Wheel bearing
Service Rating	Line
Minimum Certification	Owner **and** SPC, LSA-RM, or A&P
Additional References	Matco or Grove Wheel user manual

1. Lift and support the aircraft. (1-16)
2. Remove the main wheel and tire assembly.
3. Remove and clean the main wheel bearings (2).
4. Apply wheel-bearing grease to each of the bearings.
5. Install the wheel-bearings.
6. Install the wheel and tire assembly and adjust as described in the appropriate wheel user manual.

NOSE FORK PIVOT TENSION AND LUBRICATION

Special Tools	Tensile weight scale
Expendable	Waterproof wheel bearing grease Scotchbrite pad Fine sandpaper
Replaceable	Nose fork bushings
Service Rating	Line
Minimum Certification	LSA-RM, or A&P
Additional References	KAI

1. Lift and support the aircraft. (1-16)
2. Remove the nose fork cotter pin, nut, and spring washers (2) **Note the specific orientation of the Spring Washers**.
3. Clean the end of the nose gear leg and the nose fork bushings. Inspect the stub of the gear leg for rust/corrosion and remove if noted.
4. Apply a liberal amount of marin61e trailer (or waterproof equivalent) wheel bearing grease to the nose fork bushings and stub of the nose gear leg.
5. Installation procedure is reverse of the removal procedure.
6. Tighten the nut until a push or pull force of 18-20 lbs applied at the axle is measured while the nose fork is rotating around the end of the nose gear leg.

WHEEL ASSEMBLY BALANCING PROCEDURE

● NOTE: IT IS NOT A MAINTENANCE REQUIREMENT THAT THE NOSE OR MAIN WHEEL/TIRE ASSEMBLIES ON THE RV-12iS BE BALANCED BECAUSE OF THE RELATIVELY LOW TAKEOFF AND LANDING SPEED. SHOULD A VIBRATION BE DETECTED THAT IS SUSPECTED TO BE CAUSED BY A WHEEL/TIRE IMBALANCE, THIS PROCEDURE MAY BE USED.

1. Remove the suspected out of balance wheel/tire assembly(s) from the aircraft.
2. Mount the Wheel/Tire assy. in a static balance test stand and allow the assy. to rotate to the heavy side down position.
3. A.) Main Wheel assy. - Use tape to temporarily add stick on wheel weights (obtain from a local automotive store commonly available wheel weights with self-adhesive) to the outboard wheel flange, opposite the heavy point of the wheel, until the assy. can be moved to any rotational position without it rotating. Mark the position of the wheel weights and then remove them. Thoroughly clean the area of the wheel flange where the wheel weights will be located. Remove the protective backing and press the wheel weights in place on the wheel flange.

   B.) Nose Wheel assy. - Use tape to temporarily add stick on wheel weights to the interior area of the nose wheel (working through the lightening holes in the wheel). If the proper weight location coincides with one of the three wheel through bolts, distribute the weight, as close as possible, to each side of the through bolt. Thoroughly clean the interior area of the wheel where the wheel weights will be located. Remove the protective backing and press the wheel weights in place on the interior area of the wheel.
4. Re-install the wheel assy. on the aircraft.

Chapter 6 - **FLIGHT CONTROLS**

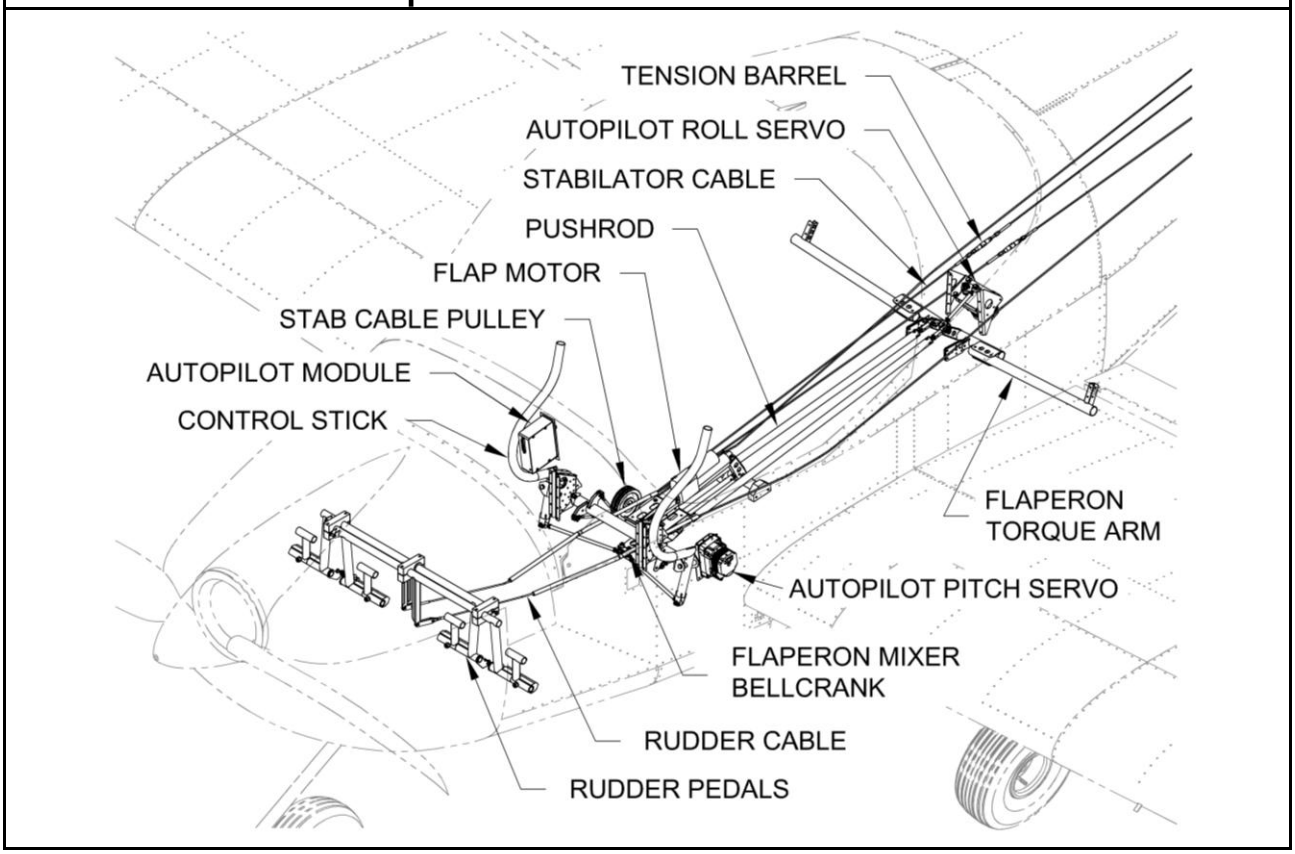

Overview 6-2
Components 6-2
Service 6-3
Supplies 6-3
Special Tools 6-3
Expendable 6-3
Replaceable 6-3
General 6-3
Stabilator pulley replacement and cable tension adjustment 6-3
Control cable replacement 6-6
Rod end replacement 6-7
Bellcrank bearing replacement 6-7
Rudder pedal removal 6-8
Installation 6-8
Service Schedule Procedures 6-8
Control system rod end lubrication 6-8
Cable end hardware lubrication 6-9

OVERVIEW

NOTE: Reference Addendum A-1 when using control stick grip with joystick trim (CS-12001).

The flight control system enables the pilot to operate the control surfaces. Forward or aft movements of the control stick control the pitch. The pitch control linkage is a pair of cables, each routed around a pulley and attached to control horns on the stabilator. The pitch-trim is controlled by a linear actuator influencing the length of the anti-servo tab pushrod assembly, controlled by the pilot using a stick mounted switch or optionally, by the autopilot. Side-to-side movements of the control stick controls roll via push rods, a bell crank, and torque tubes. Rudder pedals control yaw via cables to the rudder. The flaps function of the flaperons is activated by a linear actuator controlled by a switch on the center console.
Refer to the KAI to identify the individual parts and part #'s of the control system.

• NOTE: This maintenance manual is intended to be used in conjunction with the RV-12iS Kit Assembly Instructions (KAI) when completing maintenance or repair processes.

COMPONENTS

Quantity	Part or Assembly Name	Part Number or Reference
1	Flap Handle Pushrod	Refer to KAI
1	Flaperon Mixer Bellcrank	F-1263A & F-1263B
2	Control stick pushrod	Refer to KAI
2	Control stick	WD-1212
2	Flaperon pushrod	Refer to KAI
1	Left flaperon torque arm	Refer to KAI
1	Right flaperon torque arm	Refer to KAI
2	Stabilator cable	F-01247C & E
2	Rudder cable	F-01239-1
2	Rudder pedal	WD-01206-1
2	Stab cable pulley	MS24566-4B
4	Locking clips	MS21256-1
1	Pitch / Trim servo	See Chapter 8
	Optional Components	
1	Autopilot Module	IF DYNON AP SV-AP-PANEL and SV-KNOB-PANEL or Garmin GMC 507
1	Autopilot (Pitch) Servo	IF DYNON AP SV32 or Garmin GSA 28
1	Autopilot (Roll) Servo	IF DYNON AP SV32 or Garmin GSA 28

SERVICE

Annual lubrication will maximize the longevity of the control system. Refer to the service schedule checklist for the specific service frequency of the components.
See Supplement for *service schedule checklist.*

SUPPLIES

SPECIAL TOOLS	EXPENDABLE
♦ Cable tension meter ♦ Spring clamps (3) ♦ Stick, 41" long	♦ Cotter pins ♦ Safety wire ♦ Spray lubricant ♦ MS21256-1 Lock Clips
	REPLACEABLE
	♦ Stabilator pulley ♦ Stabilator cables ♦ Rudder cables ♦ Bearing #DW4K2X (Bellcrank) ♦ Rod ends: ▪ Control Stick: M3414 / CM-4MS ▪ Flaperon: F3514M ▪ Trim/Servo: MM-3 ♦ Rudder pedal

GENERAL

STABILATOR PULLEY REPLACEMENT AND/OR CABLE TENSION ADJUSTMENT

Special Tools	Cable tension meter Spring clamps (3) Stick, 41" long
Expendable	Cotter pins, MS21256-1 Lock Clips (4)
Replaceable	Stabilator pulley
Service Rating	Line
Minimum Certification	LSA-RM, or A&P
Additional References	KAI Section 32

1. Remove the right seat ramp cover and baggage bulkhead corrugation. (3-4)

2. Remove the stabilator control cable barrel lock clips from one barrel as shown in **Figure 17**. Locking clips are one use only. Clips must be discarded after removal.

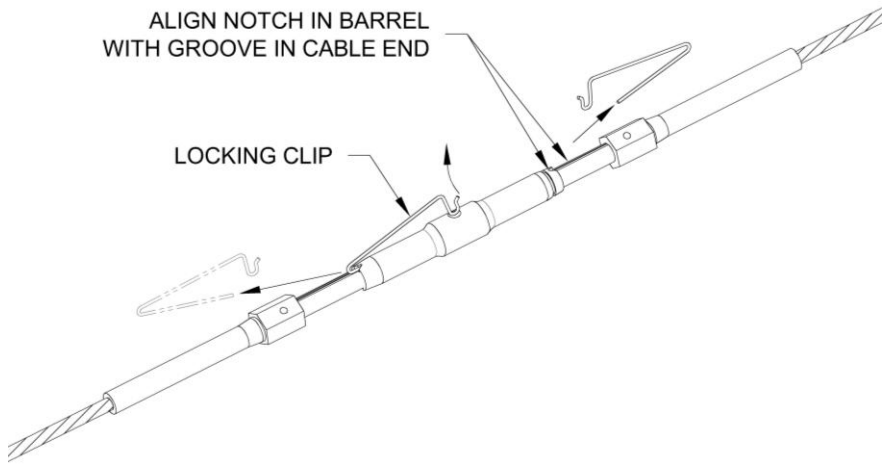

Figure 17: Locking clip removal

3. Loosen the tension of the stabilator cables by turning the tensioner barrel as shown in **Figure 18**.

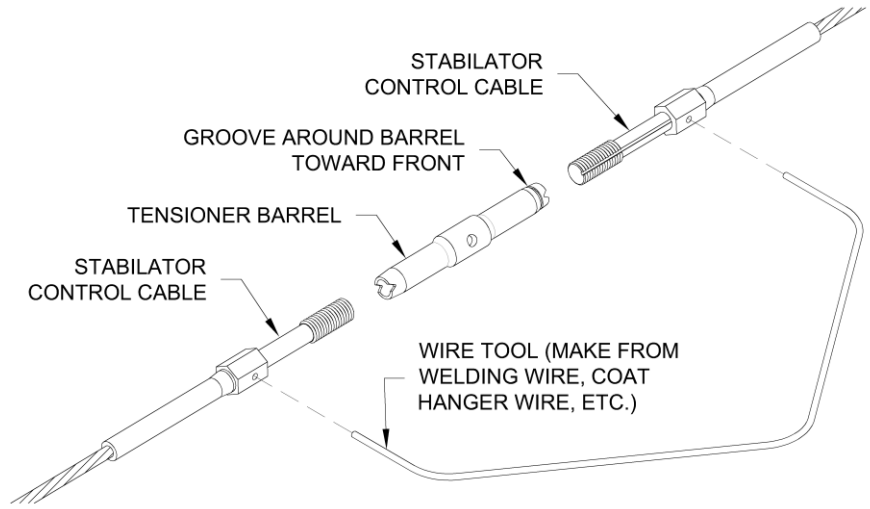

Figure 18: Tensioner barrel removal

4. Remove the pulley axle hardware and pulleys.
5. Capture the stabilator cables between the bushing and the new pulleys.
6. Install the pulley axle hardware.
7. Place a small weight on the stabilator to hold it trailing edge down. Remove the slack from the upper cable by tightening the upper turnbuckle until the control stick and stabilator just start to lift off the stops at about the same time when the stick is moved aft.

   Remove the slack from the other cable by adjusting the lower turnbuckle. Check the entire length of the cables to ensure they are free from interference, are properly aligned in the pulleys, and do not touch each other. Pull the stick aft to make sure that the stabilator trailing edge moves up.

NOTE: Cable tension will change significantly with changing temperature. The cable tensions given below are for an aircraft stabilized at a temperature of 70° F.

8. Position one of the WD-1212 Control Sticks so that the top end is 10 inches from the instrument panel. Secure the control stick in place using a spring clamp to attach it to a 41" long stick bridged between and clamped to the upper longerons.

   Check the cable tension just aft of the F-1207B Baggage Bulkhead using a calibrated cable tension meter, making sure the control stick is still correctly positioned.

   Adjust turnbuckles an equal number of turns each to achieve 35-45 lbs of tension with the groove in the cable ends aligned with a V-notch in each turnbuckle barrel as shown in Figure 17. This tension will prevent the cables from "slapping" against the tailcone bulkheads when the control sticks are moved suddenly and repeatedly forward then aft.

9. Remove the clamp and stick from the control stick and the weight from the stabilator.

   Move the control stick between the forward and aft pitch stops. The stabilator should reach its travel stops just before the corresponding control stick stops are reached. If not, adjust the turnbuckles an equal and opposite number of turns until this is achieved. (Example: If the stabilator reaches its T.E. up stop too soon loosen the upper turnbuckle and tighten the lower turnbuckle. This will lengthen the upper cable and shorten the lower cable). After making adjustments repeat step 6 to reconfirm proper cable tension.

10. Once the proper tension is achieved, and no more than three threads are exposed from the ends of the barrels, align the V-notch in the ends of the barrel with the groove in the cable ends and then insert the lock clips as shown in Figure 17. The hook end of the lock clips are inserted into the hole in the center of the barrel and must be completely pressed in until the hook springs open inside the barrel.

CONTROL CABLE REPLACEMENT

■ ***CAUTION: THE CONTROL SURFACE WILL SWING FREELY WHEN THE CONTROL CABLES ARE REMOVED.***

● ***NOTE: ALWAYS REPLACE CONTROL CABLES AS A SET.***

Special Tools	String Cable tension meter Spring clamps (3) Stick, 41" long
Expendable	Cotter pins Lock Clips
Replaceable	Stabilator cables Rudder cables
Service Rating	Line
Minimum Certification	LSA-RM, or A&P
Additional References	KAI

1. Remove the seat ramp cover, baggage bulkhead corrugation, upper tail cone fairing, lower tail cone fairing, (3-4)
2. **For rudder cable**, remove the rudder cable sleeve attach hardware; screws (3), washers (3), nuts (3) (located beneath seat ramp cover.
3. **For the stabilator cable**, remove the stabilator pulleys. (6-4)

● ***NOTE: TIE A STRING, LONGER THAN THE CONTROL CABLE, TO THE FWD END OF THE CONTROL CABLE AND WRAP THE SAME END OF THE CONTROL CABLE WITH A PIECE OF TAPE TO AVOID BULKHEAD DAMAGE.***

4. Disconnect the attach hardware (see below) at the forward and aft end of the cable to be removed.
   Rudder cable end hardware:
   Fwd; bolt, washer, nut, and cotter pin.
   Aft; bolt, washers (3), nut, and cotter pin.
   Stabilator cable end hardware:
   Fwd; bolt, washer (2), nut, and cotter pin.
   Aft; bolt, washers (3), nut, and cotter pin.
5. Pull the cable out from the opposite end of the string. Remove the cable, leaving the string in its place.
6. Tie the new cable to the end of the string and cover the end with a piece of tape.
7. Installation procedure is reverse of the removal procedure, using the string to pull the cable through the fuselage.
8. Adjust cable tension as described earlier in this chapter.

ROD END REPLACEMENT

Expendable	Cotter pins
Replaceable	Applicable rod end
Service Rating	Line
Minimum Certification	LSA-RM, or A&P
Additional References	KAI

1. Remove applicable combination of the seat ramp cover, Center console and, baggage cover
2. Remove the control rod attach hardware from the rod end for replacement;
   Control stick – control stick pushrod: bolt, washers (3), and nut.
   Control stick pushrod – bellcrank: washer and nut.
   Bellcrank – Flap handle pushrod: bolt, washer and nut.
   Flap crank assembly—bellcrank: bolt and washers (2)
   Flaperon pushrod – flaperon torque arm: bolt, washers (2) and nut.
3. Make note of the number of threads exposed on the rod end shaft and the clocking of the bearing body.
4. Remove the rod end and jam nut.
5. Add a jam nut to the new rod end shaft.
6. Install the new rod end to the position (from step 3) of the original rod end.
7. Install the control rod and control rod attach hardware.

BELLCRANK BEARING REPLACEMENT

Tools	1/4 drive socket slightly less than 5/8in in diameter. (A common standard 7/16 socket generally works.) 3/8 drive, 3/4 socket Hex Bolt 1/4 diameter 3 inches long (must be threaded at least 50% of its length) 1/4 Flat Washer(2) and Hex Nut
Expendable	None
Replaceable	Bearing DW4K2X
Service Rating	Line
Minimum Certification	LSA-RM, or A&P
Additional References	KAI Section 32

1. Remove the aft center console. (3-4)
2. Remove the pushrod-to-bellcrank hardware:
   Control stick pushrod: washer and nut
   Bellcrank pivot bolt: bolt, washers (2)
   Flaperon pushrod: bolt, washer and nut
3. Remove the bellcrank.
4. Use the same method instructed for extracting the DW4K2X hinge bearing on

page 5-20, Figure 16.
5. Installation procedure is reverse of the removal procedure.

RUDDER PEDAL REMOVAL

Expendable	Cotter pins
Replaceable	Rudder pedal
Service Rating	Line
Minimum Certification	LSA-RM, or A&P
Additional References	KAI Section 28 Matco user manual

1. Remove the fwd. tunnel side covers. (3-4)
2. Remove the rudder pedal access cover (directly aft of the horizontal tubes of the rudder pedals) and hardware; screws (10)

● ***NOTE: THE MASTER CYLINDERS CAN BE REMOVED WITHOUT DISCONNECTING THE BRAKE LINES.***

3. Label, and then remove the master cylinders (4) from the rudder pedals. (7-3)
4. Remove the rudder cable hardware from each rudder cable; cotter pin, bolt, washers (3) and nut.
5. Remove the rudder pedal-block hardware; bolts (2) and washers (2), from each of the rudder pedal-blocks (3).
6. Remove rudder pedal assembly.

INSTALLATION

1. Installation procedure is reverse of the removal procedure.

SERVICE SCHEDULE PROCEDURES

CONTROL SYSTEM ROD END LUBRICATION

Expendable	Spray lubricant
Replaceable	None
Service Rating	Line
Minimum Certification	LSA-RM, or A&P
Additional References	KAI Section 32

1. Remove the seat ramp covers, aft center console, and aft baggage floor cover. (3-4)

2. Apply lubricant sparingly to the rod-end bearings on each end of the following components:
    - Flap handle pushrod
    - Control stick pushrod
    - Flaperon pushrod
    - Trim / Servo pushrod
3. Allow lubrication to penetrate then wipe away excess.

CABLE END HARDWARE LUBRICATION

Expendable	Spray lubricant
Replaceable	None
Service Rating	Line
Minimum Certification	LSA-RM, or A&P
Additional References	KAI

1. Remove the fwd. tunnel side covers, right seat ramp cover, upper tailcone fairing, and lower tailcone fairing. (3-4)
2. Apply lubricant sparingly to the hardware at both ends of the rudder and stabilator control cables.

THIS PAGE INTENTIONALLY LEFT BLANK

Chapter 7 - **BRAKE SYSTEM**

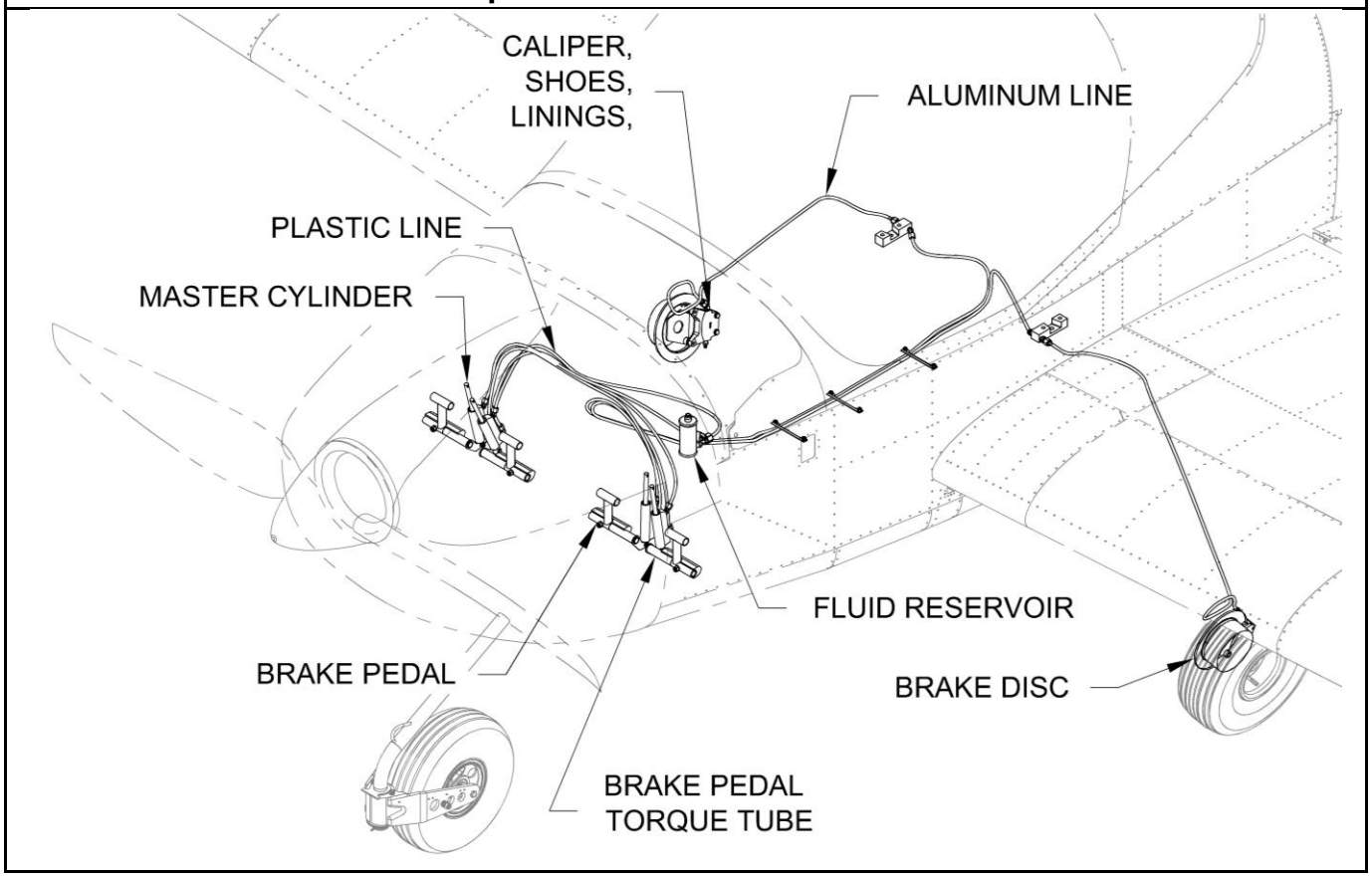

OVERVIEW 7-2
Components 7-2
SERVICE 7-2
Supplies 7-3
Special Tools 7-3
Expendable 7-3
Replaceable 7-3
General 7-3
Master cylinder removal 7-3
Removal 7-3
Disconnection 7-3
Installation 7-4
Service Schedule Procedures 7-4
Brake pedal torque tube lubrication 7-4
Hydraulic fluid drain, flush, and replace 7-5
Draining 7-5
Flushing 7-5
Replacing 7-5
Brake lining replacement 7-6

OVERVIEW

NOTE: Reference Addendum A-2 when parking brake is installed.

The brake system includes the necessary components to provide directional control and stopping ability while taxiing. The left and right brakes are independently controlled hydraulic disc brakes. The fluid reservoir supplies the master cylinders with hydraulic fluid. Pressure applied to either brake pedal causes the master cylinder to force hydraulic fluid through the plastic and aluminum lines to the corresponding brake caliper.
The RV-12iS can be equipped with Wheel/Brake assemblies made by Matco or Grove. The Matco wheel can be identified by a hub assembly that bolts to the wheel halves. The Grove wheel assembly has integral hub halves on each wheel half like other traditional light aircraft wheels.
Refer to the Matco or Grove manuals and the KAI to identify the individual parts of the brake system.

- ***NOTE: This maintenance manual is intended to be used in conjunction with the RV-12iS Kit Assembly Instructions (KAI) when completing maintenance or repair processes.***

COMPONENTS

Quantity	Part or Assembly Name	Part Number or Reference
2	Disc and caliper	Refer to Matco or Grove manual
4	Brake lining plates	Refer to Matco or Grove manual
4	Brake linings	Refer to Matco or Grove manual
4	Brake pedal	WD-1209
2-L,2-R	Brake pedal torque tube	WD-1211-L & R
2	Left brake master cylinder	BRAKE MAST CYL LEFT-1
2	Right brake master cylinder	BRAKE MAST CYL RIGHT-1
1	Fluid Reservoir	VA-107
2	Aluminum Line	Refer to KAI
6	Plastic Line	Refer to KAI

SERVICE

Use of the proper hydraulic fluid is necessary for proper operation of the brake system. It is good practice to replace the hydraulic fluid every 5 years. If any indication of contamination is present, replace hydraulic fluid as soon as possible. Since the brakes on the RV-12iS are relied on for part of the airplanes steering control on the ground, any detected leaks should be repaired prior to further flight. Refer to the *service schedule checklist* for component service frequency.

SUPPLIES

■ *CAUTION: USE ONLY MIL SPEC MIL-PRF-83282 (PREFERRED) OR MIL-H-5606A HYDRAULIC FLUID! DO NOT USE AUTOMOTIVE BRAKE FLUID. DAMAGE TO O-RING SEALS MAY RESULT.*

SPECIAL TOOLS	EXPENDABLE
♦ Brake bleeding fluid pump ♦ Container	♦ Hydraulic fluid ♦ Wheel bearing grease ♦ Cotter pins ♦ Brake linings
	REPLACEABLE
	♦ See component list on page 7-2.

GENERAL

MASTER CYLINDER REMOVAL

■ *CAUTION: THE LEFT AND RIGHT MASTER CYLINDERS ON EACH SIDE OF THE AIRCRAFT ARE NOT INTERCHANGABLE.*

Expendable	Hydraulic fluid Cotter pins
Replaceable	Left/Right Brake master cylinder
Service Rating	Line
Minimum Certification	LSA-RM, or A&P
Additional References	KAI Section 28 Matco user manual

REMOVAL

1. Remove the upper and lower master cylinder attach hardware.
   Upper: clevis pin, washer, and cotter pin.
   Lower: bolt, washer, nut, and cotter pin.

DISCONNECTION

1. Drain the hydraulic fluid. (7-5)
2. Make note of the hose connections.
3. Disconnect brake lines from master cylinder.

INSTALLATION

1. Installation procedure is reverse of the removal procedure.
2. Bleed the brake system. (7-5)

SERVICE SCHEDULE PROCEDURES

BRAKE PEDAL TORQUE TUBE LUBRICATION

Expendable	Cotter pins Wheel bearing grease
Replaceable	None
Service Rating	Line
Minimum Certification	LSA-RM, or A&P
Additional References	KAI Section 28

● ***NOTE: SERVICE ONE PEDAL AT A TIME.***

1. Actuate the rudder pedals so that the brake pedal to be serviced is offset from the adjacent rudder and brake pedal. The following steps relate to **Figure 19**.
2. Remove the master cylinder lower hardware.
3. Remove the WD-1209 brake pedal hardware; bolt, washer, and nut.

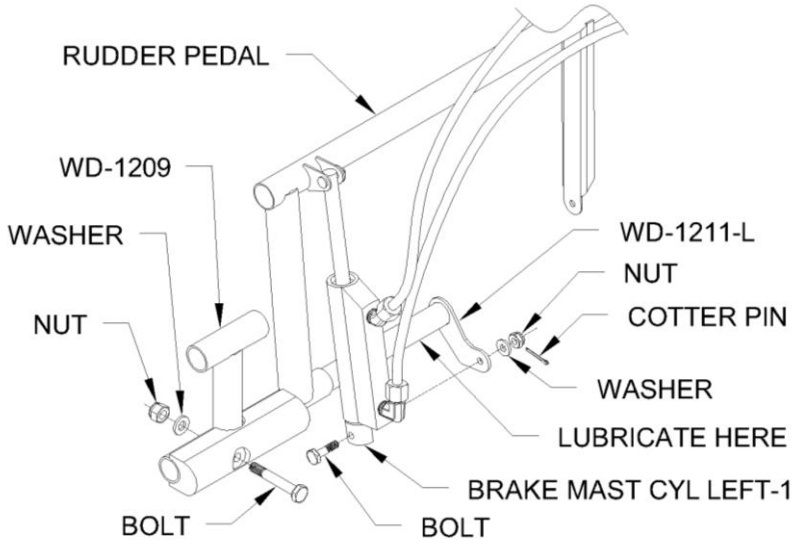

Figure 19: Torque tube lubrication

4. Remove the brake pedal block from the brake pedal.
5. Remove the WD-1209 brake pedal from the rudder pedal.
6. Clean the pivot tube then apply grease to the exterior of the tube.
7. Installation procedure is reverse of the removal procedure.

HYDRAULIC FLUID DRAIN, FLUSH, AND REPLACE

Expendable	Hydraulic fluid
Replaceable	None
Service Rating	Line
Minimum Certification	LSA-RM or A&P
Additional References	KAI Matco user manual

DRAINING

1. Place suitable containers beneath each brake caliper to capture hydraulic fluid from each bleeder valve.
2. Open the bleeder valve on each brake caliper and allow fluid to drain.

FLUSHING / REPLACING

1. Install a clear hose on the top of the brake fluid reservoir and insert it in a container to catch fluid overflow.
2. Attach a pump style oil can filled with hydraulic fluid to the bleeder valve on the bottom of one of the brake calipers. Open the bleeder valve and pump the oil can until clean fluid flows in the clear tube at the top of the fluid reservoir. Close the bleeder valve and remove the oil can and hose.
3. Repeat the previous step on the other brake caliper.
4. Confirm that the brake pedal at each seat position for the left and right brake systems feel firm with no sponginess when pressed. Also confirm that there are no air bubbles visible in the translucent brake lines between the left and right seat rudder pedals. If there is any sponginess or presence of air bubbles repeat the flushing / replacing steps.
5. Use a syringe to slightly reduce the fluid level in the reservoir and reinstall the reservoir cap.

BRAKE LINING REPLACEMENT

• NOTE: IT IS RECOMMENDED TO REPLACE ALL OF THE BRAKE LININGS ON BOTH SIDES EVEN IF ONLY ONE LINING REQUIRES REPLACEMENT.

Expendable	Brake linings Safety wire
Replaceable	Brake disc
Service Rating	Line
Minimum Certification	LSA-RM or A&P
Additional References	KAI Matco or Grove user manual

1. Remove the 2 safety wired bolts and remove the stationary brake lining plate.
2. Remove the brake caliper from the brake mounting plate (use care to not damage the aluminum brake line)
3. Remove the floating brake lining mounting plate.
4. Check that the brake disc is within thickness wear limits. Replace if necessary.
5. Install new linings on the brake mounting plates per Matco or Grove instructions.
6. Install the floating brake mounting plate on the brake caliper.
7. Install the brake caliper on the brake mount plate.
8. Install the stationary brake lining mount plate and safety wire the bolts.

• CAUTION: UNTIL THE BRAKE LINING CONDITIONING PROCEDURE HAS BEEN COMPLETED, BRAKE EFFECTIVENESS CAN BE SEVERELY REDUCED WHICH WILL NEGATIVELY EFFECT STEERING ABILITY AND WILL GREATLY IMPACT THE STOPPING DISTANCE

9. Complete the brake lining condition procedure as specified in the Matco or Grove user manual.
10. Test for proper brake system operation. Check the hydraulic fluid level.

Chapter 8 - **ELECTRICAL SYSTEM**

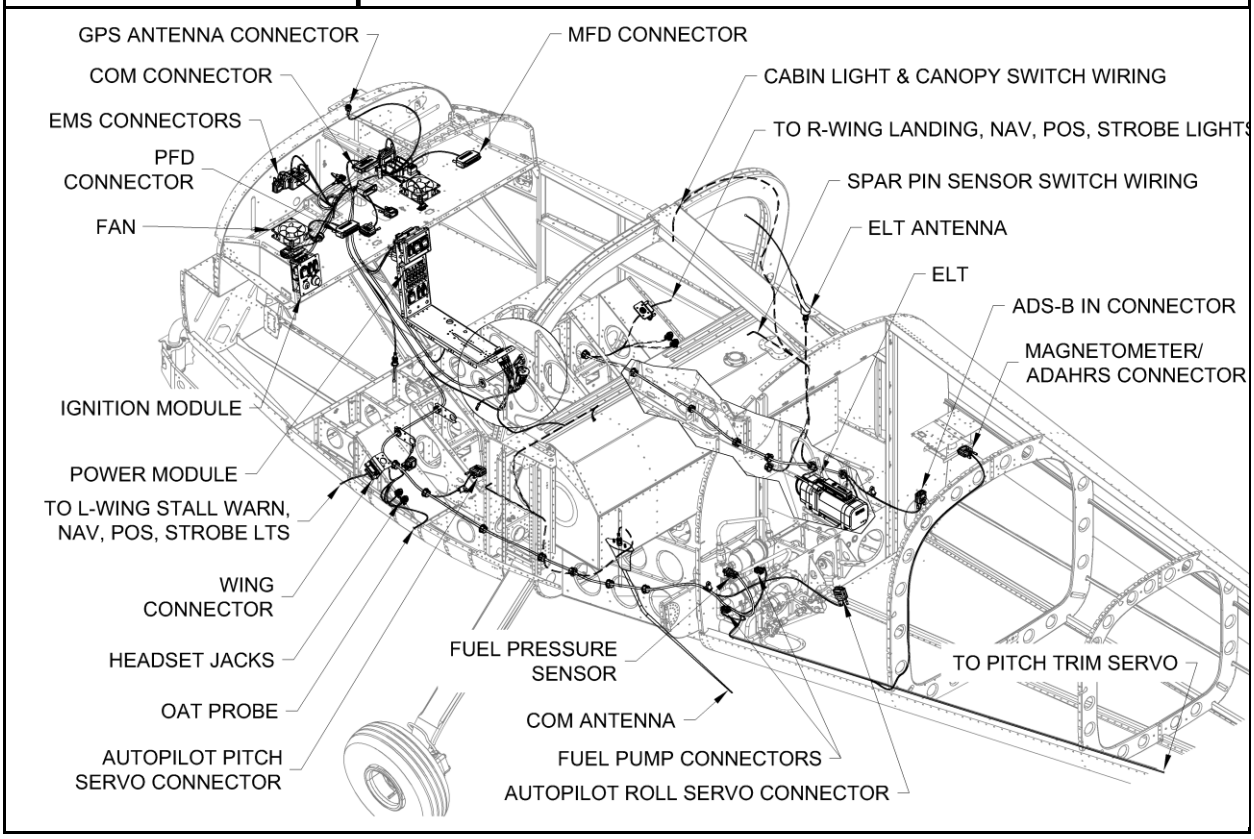

OVERVIEW 8-2
Components 8-2
Optional Lighting 8-3
Optional Components 8-3
SERVICE 8-4
Supplies 8-4
Special Tools 8-4
Expendable 8-4
Replaceable 8-4
General 8-5
Battery removal 8-5
Installation 8-5
Fuse replacement 8-6
Pitch-trim servo replacement 8-7
Electrical component replacement 8-8
Wire repair 8-9
Wire replacement 8-9
Snap bushing replacement 8-10
Service Schedule Procedures 8-11
Battery recharge 8-11

• NOTE: FOR A SCHEMATIC OF THE ELECTRICAL SYSTEM REFER TO THE POH OR GO TO THE DOWNLOADS PAGE AT WWW.VANSAIRCRAFT.COM

OVERVIEW

▲ WARNING: THE RV-12iS (ULS) FUSE MODULE IS NOT SERVICEABLE. SERIOUS RISK OF ELECTRIC SHOCK REMAINS AFTER THE POWER SUPPLY IS REMOVED.

NOTE: Reference Addendum A-3 when using dash-mounted cabin lighting.

The RV-12iS electrical system is a 12 VDC, negative ground system equipped with either an EarthX Lithium (LiFePO4) (iS) or Odyssey lead/acid dry cell (ULS) style battery mounted on the forward right side of the firewall. The generator operates only while the engine is running. The generator supplies power to the regulator, which serves the primary aircraft power system and charges the battery. The primary aircraft power is a 30 amp fused circuit. Lights, servos, fans, avionics, and control switches are all fused secondary circuits and part of the primary circuit.

• NOTE: This maintenance manual is intended to be used in conjunction with the RV-12iS Kit Assembly Instructions (KAI) when completing maintenance or repair processes.

COMPONENTS

Quantity	Part or Assembly Name	Part Number or Reference
1	Battery	EarthX ETX900(iS) or ES PC680(ULS)
12	Blade Fuse	ATO/ATC ¼ " blade style 1, 2, 3, 5, 7.5, 10, 30 Amp rating. All fuse values of 3 amp and higher are required to have LED "blown fuse" indicators.
1	Stall Warning switch	ES E22-50K
2	Fuselage pin switch	ES E22-50K
1	Pitch-Trim servo	ES MSTS-B6-7T-165
2	Cooling Fan	ES CPU FAN
1	12V Power Outlet	ES AS212
1	Master relay	ES 24115
16	Wing Connector (wing-to-fuse)	ES-00077, ES-00078
1	Starter	Refer to Rotax Manual
1	Regulator	Refer to Rotax Manual
1	Ignition A	Refer to Rotax Manual
1	Ignition B	Refer to Rotax Manual
1	Starter relay	Refer to Rotax Manual

OPTIONAL LIGHTING

The lighting components include the wing tip light assembly, extension, landing light rib, landing light, lens backing strip, landing light lens and red eyeball cockpit light. See Figure 20. The wing tip light mounts in the extension which attaches to the wing tip. The landing light is mounted to the landing light rib which is attached inside the wing skin. The eyeball light mounts to the rollover structure.

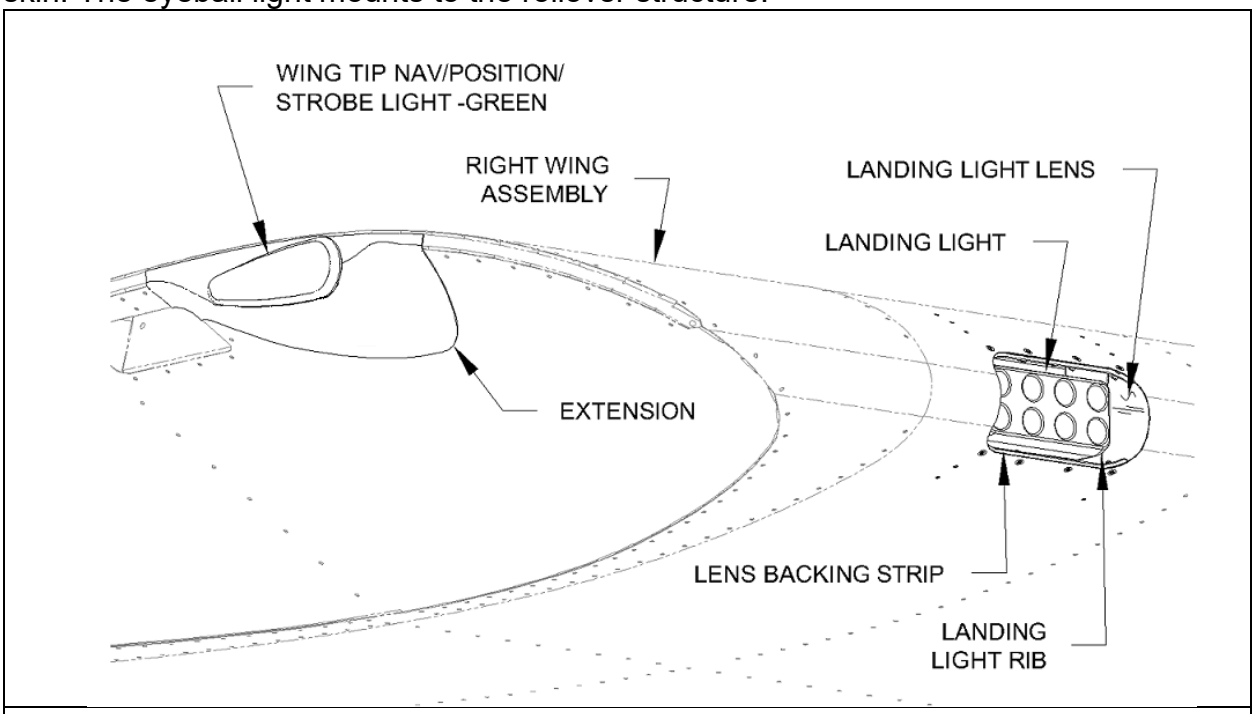

Figure 20: Optional Wing Tip Lighting (eyeball light not shown)

OPTIONAL COMPONENTS

Quantity	Part or Assembly Name	Part Number or Reference
1	Lighting	See shaded items below & Refer to KAI
1	Wing Tip NAV/Position/ Strobe Light Set	LN-200-1 (green light shown)
2	Extension	W-1222-L and W-1222-R
1	Lens Backing Strip	W-1223E
1	Landing Light	LL-200
1	Landing Light Lens	W-00014 (Lens Only)
	Not Shown	See shaded items below & Refer to KAI
1	Landing Light Rib	W-1223B
1	Red Eyeball Cockpit Light	LC ECL-02

SERVICE

▲ WARNING: ALWAYS HAVE AN APPROPRIATE FIRE EXTINGUISHER READILY AVAILABLE.

▲ WARNING: BEFORE PERFORMING ANY MAINTENANCE OR REPAIRS TURN THE MASTER SWITCH 'OFF' AND DISCONNECT THE NEGATIVE (-) BATTERY CABLE FROM THE BATTERY.

■ CAUTION: REPLACEMENT COMPONENTS, WIRE, TERMINALS, AND FUSES MUST BE OF THE SAME TYPE AND RATING AS THE ORIGINAL PARTS.

There are no serviceable electrical components. Replace malfunctioning or failed components. Electrical components that are omitted from the component list on page 8-2 are not considered line maintenance.

SUPPLIES

TOOLS	EXPENDABLE
♦ Battery charger ♦ Wire terminal crimping tool ♦ Wire cutter ♦ Multi-meter ♦ Razor knife	♦ Wire terminals: ▪ Splice ▪ Spade (male/female) ▪ Ring
	REPLACEABLE
	♦ See component list on page 8-2. ♦ Wire (gauge = original) ♦ Snap bushing (size = original)

GENERAL

BATTERY REMOVAL

Expendable	None
Replaceable	Battery
Service Rating	Line
Minimum Certification	Owner **and** SPC, LSA-RM or A&P
Additional References	EarthX or Odyssey owner's manual

1. Remove the top cowl. (12-4)
2. Remove the negative (-) battery cable.
3. Remove the positive (+) battery cable.
4. Remove the battery box angle.
5. Lift the battery to remove.

INSTALLATION

1. Installation procedure is reverse of the removal procedure.

FUSE REPLACEMENT

■ ***CAUTION: BLOWN FUSES MUST BE REPLACED ONLY WITH FUSES OF THE SAME TYPE AND RATING AS SPECIFIED BY THE MANUFACTURER.***

■ ***CAUTION: THE MASTER SWITCH MUST BE IN THE 'OFF' POSITION BEFORE REPLACING ANY FUSE.***

● ***NOTE: REPLACEMENT FUSES FOR ANY CIRCUIT IN WHICH A 5 AMP FUSE OR LARGER IS SPECIFIED MUST BE OF THE TYPE THAT ILLUMINATE WHEN BLOWN.***

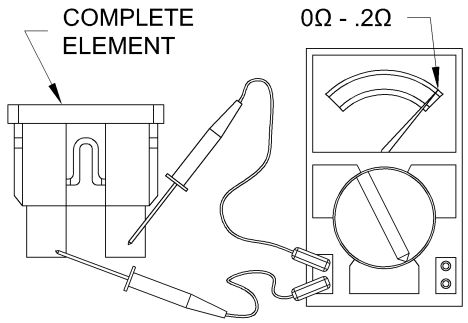

Good Fuse

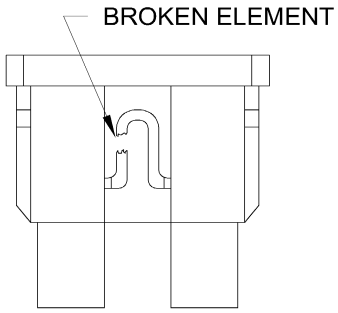

Blown Fuse

1. Remove the suspected blown fuse.
2. Perform visual inspection and/or use multi-meter to test fuse.
3. Insert new fuse with proper rating as shown in the POH.
4. A recurring blown fuse indicates excessive current draw from the corresponding circuit of the electrical system. See Chapter 18.

PITCH-TRIM SERVO REPLACEMENT

Special Tools	D-sub pin extractor
Expendable	None
Replaceable	Pitch-Trim servo
Service Rating	Line
Minimum Certification	LSA-RM, or A&P
Additional References	KAI Section 11

REMOVAL

1. Disconnect the negative (-) battery cable.
2. Remove the upper and lower tailcone fairing. (3-4)
3. Disconnect the pitch-trim servo D-sub connector. Detach the servo connector half from the servo tray.
4. Disconnect the trim servo from the AST assembly by removing the bolt, washers (3) and nut.
5. Remove the trim servo from the servo tray by removing the screws (4), washers (4), and nuts (4).
6. Remove the 5 wires from the d-sub connector using a pin extractor.
7. Take note of the position of the clevis and jam nut on the servo shaft and then remove them from the servo.

INSTALLATION

1. Thread the jam nut onto the new pitch-trim servo shaft until it contacts the pitch trim servo shaft housing. Thread the pitch-trim servo shaft onto the clevis rod end on the pushrod assembly until it contacts the jam nut. Back the pitch-trim servo off two full turns. Tighten the jam nut against the pushrod assembly.
2. Insert the wire pins on the new servo into the appropriate pin locations on the d-sub connector (Refer to KAI Section 11).
3. Install the servo on the servo tray by reversing the process used for removal.
4. Switch on the master switch and verify that when the pitch trim is activated in the nose down direction, the antiservo tab assembly moves up. If the AST moves in the wrong direction, double check that the servo wires were inserted into the correct connector pin locations.
5. Confirm proper movement of the pitch trim indicator. If incorrect, double check the wiring on the connector.

ELECTRICAL COMPONENT REPLACEMENT

▲WARNING: BEFORE PERFORMING ANY MAINTENANCE OR REPAIRS TURN THE MASTER SWITCH 'OFF' AND DISCONNECT THE NEGATIVE (-) BATTERY CABLE FROM THE BATTERY.

■ CAUTION: REPLACEMENT COMPONENTS, WIRE, TERMINALS, AND FUSES MUST BE OF THE SAME TYPE AND RATING AS THE ORIGINAL PARTS.

Special Tools	Wire cutter Terminal crimping tool
Expendable	Wire terminals
Replaceable	See component list. (8-2)
Service Rating	Line
Minimum Certification	LSA-RM, or A&P
Additional References	KAI

1. Disconnect negative (-) ground wire.
2. Remove the applicable access covers to expose the failed component (3-4)
3. Label the wires. Disconnect the wire(s) from the failed component.
4. Make note of the hardware configuration.
5. Disconnect the mechanical connection, if applicable.
6. Remove the hardware that secures the component and remove the component.
7. Install a new component, new gaskets (if applicable), and hardware of the same type.
8. Re-attach applicable electrical and mechanical connections.
9. Reconnect the negative (-) battery cable.

WIRE REPAIR

Special Tools	Wire cutter Wire stripper Wire terminal crimper Multi-meter
Expendable	Wire terminals
Replaceable	Wire
Service Rating	Line
Minimum Certification	LSA-RM, or A&P
Additional References	ASTM F39 F2639

■ ***CAUTION: THE REPLACEMENT WIRE SIZE AND TYPE MUST BE EQUAL TO THE ORIGINAL.***

1. Remove the entire damaged section of the wire.
2. Rectify the issue that caused damage to the original wire (sharp edge, chaffing, heat, etc).
3. Route the new length of wire along the same path as the original wire.
4. Use aircraft grade wire terminals to connect the new wire in place of the original wire.
5. Test the continuity of the wire to ensure a complete connection.
6. Test the operation of the electrical system.

WIRE REPLACEMENT

Special Tools	Wire cutter Wire stripper Wire terminal crimper Multi-meter
Expendable	Wire terminals
Replaceable	Wire
Service Rating	Line
Minimum Certification	LSA-RM or A&P
Additional References	ASTM F39 F2639

■ ***CAUTION: THE REPLACEMENT WIRE SIZE AND TYPE MUST BE EQUAL TO THE ORIGINAL.***

1. Bypass the existing wire with a new wire of equal length.
2. Install new terminals on the new wire that are the same type as those on the existing wire.
3. Connect the new wire terminals to the terminals that are connected by the existing wire.
4. Check the continuity of the replacement wire.
5. Test the operation of the component that is connected by the replacement wire and test the operation of the entire electrical system.

SNAP BUSHING REPLACEMENT

Special Tools	Razor knife
Expendable	None
Replaceable	Snap bushing
Service Rating	Line
Minimum Certification	LSA-RM, or A&P
Additional References	KAI

1. Extract the failed snap bushing by compressing the two locking tabs and pushing it out of the mounting hole.

2. Cut the new snap bushing as shown in **Figure 25**. The snap bushing should be of the same size and type as the original.

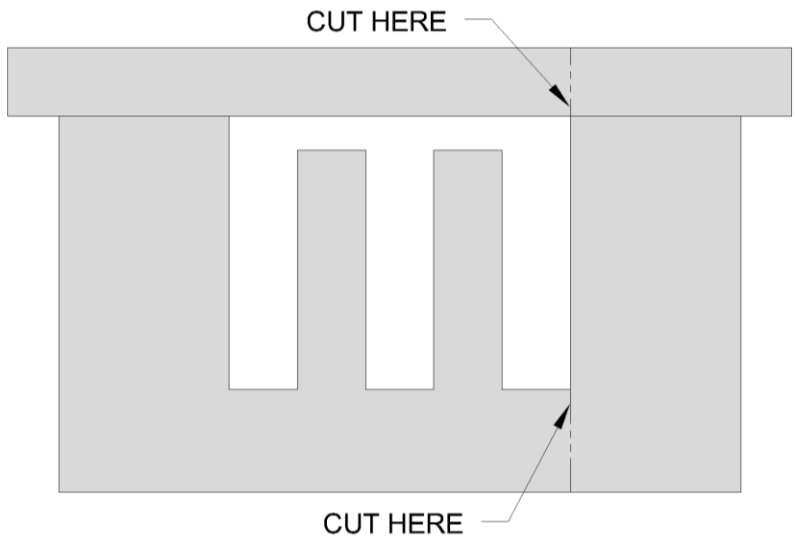

Figure 25: Snap Bushing

3. Flex open the bushing enough to insert the routed elements.
4. Snap the bushing into the corresponding hole.

SERVICE SCHEDULE PROCEDURES

■ CAUTION: THE EARTHX LITHIUM BATTERY (IF EQUIPED) REQUIRES A SPECIAL BATTERY CHARGER. REFER TO EARTHX DUCUMENTATION FOR DETAILS.

Special Tools	Battery charger (special type required for EarthX battery)
Expendable	None
Replaceable	None
Service Rating	Line
Minimum Certification	Owner **and** SPC, LSA-RM, or A&P
Additional References	Odyssey or EarthX owner's manual Battery charger owner manual

BATTERY RECHARGE

1. Connect the battery charger per the battery charger manufacturer and battery manufacture instructions.
2. For Rotax 912iS equipped aircraft if you wish to interface with the EFIS system turn on the EMS Backup Battery Switch. If the main bus voltage rises above 13.7 volts (which is likely with a battery charger connected) the automatic Start Power Button will no longer function.
3. Charge the battery per the battery manufacturer instructions.

THIS PAGE INTENTIONALLY LEFT BLANK

Chapter 9 - **INSTRUMENTS & AVIONICS**

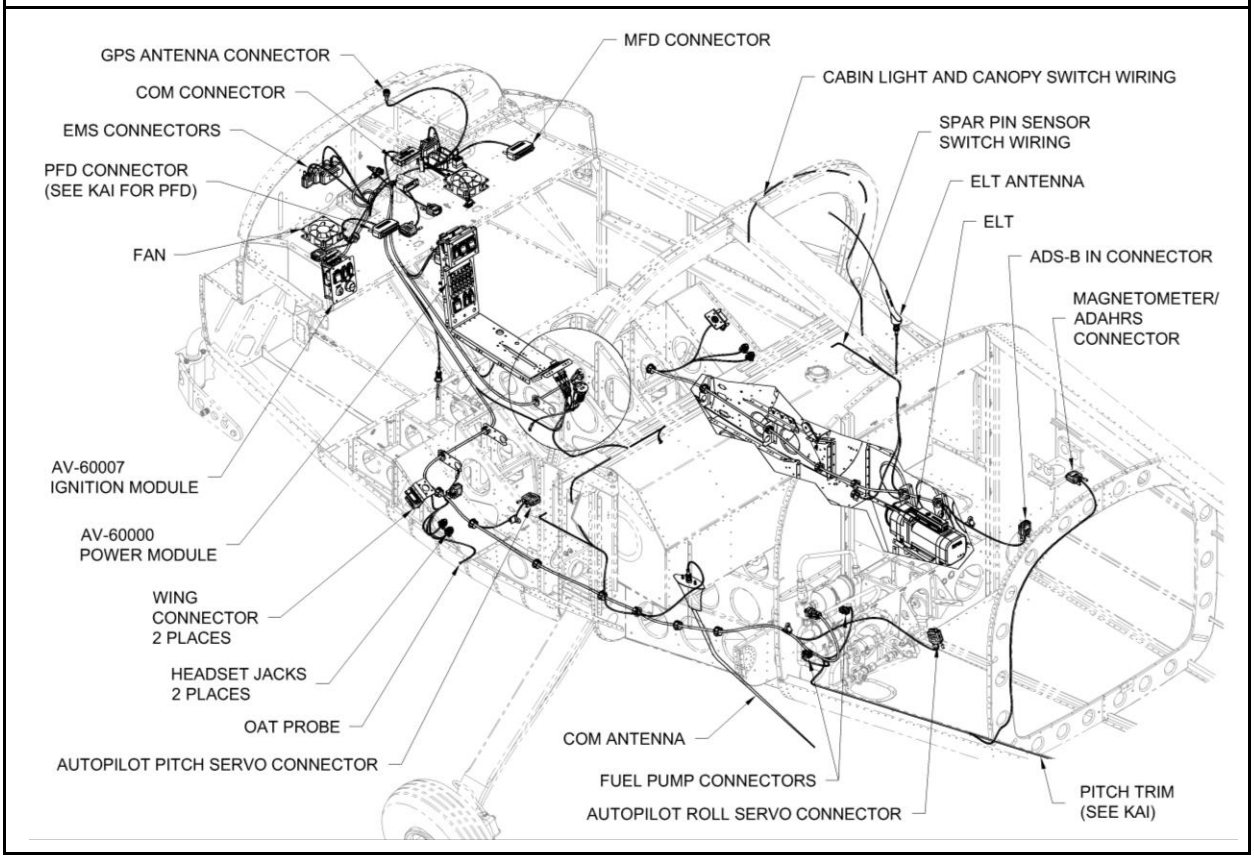

OVERVIEW 9-2
Instruments and Avionics Components 9-2
Optional Components 9-3
PITOT, STATIC 9-3
Components 9-4
SERVICE 9-4
Supplies 9-4
Special Tools 9-4
Expendable 9-4
Replaceable 9-4
General 9-5
Component replacement 9-5
Pitot/Static and AOA component replacement 9-5
Light replacement 9-6
Audio Input & Adjustment 9-6
Service Schedule Procedures 9-7
Software updates 9-7

OVERVIEW

NOTE: Reference Appendix A-4 if using a wing-mounted Pitot.

The Dynon SkyView HDX or Garmin G3X EFIS (Electronic Flight Information System) / EMS (Engine Monitoring System) replaces the traditional mechanical flight information and engine monitoring instruments. For removal, installation, inspection, or servicing of the avionics components refer to the manufacturer user manuals.

The pitot and static systems provide static and dynamic pressure sources for flight data calculations. The static system ports are located on each side of the tailcone. A flexible plastic tube from the right static port crosses the tailcone to a plastic tee and joins the flexible plastic tube from the left port. From the tee, a flexible plastic tube routes to either beneath the aft baggage floor cover (G3X) or the upper middle of the tail cone (SkyView HDX).The pitot port is an aluminum tube located at the tip of the propeller spinner cone that extends aft to an adapter block mounted to the engine. A flexible plastic tube continues aft from the adapter block to the air data computer either under the baggage floor cover or in the upper tail cone.

A port similar to that used for the static system is located in the left wing for use as an Angle of Attack (AOA) sensor. It is connected to the EFIS system using a flexible plastic line and a self-mating connector at the wing root. A leak check of the AOA system must be done anytime the wing is removed and re-installed, if required. (3-16)

- ***NOTE: This maintenance manual is intended to be used in conjunction with the RV-12iS Kit Assembly Instructions (KAI) when completing maintenance or repair processes.***

INSTRUMENTS & AVIONICS COMPONENTS

Quantity	Part or Assembly Name	Part Number or Reference
1	Dynon Skyview HDX System	See Dynon Manual
1	Garmin G3X System	See Garmin Manual
1	Garmin Axis System	See Garmin Manual
1	Garmin GTX 23 ES or SkyView SV-XPNDR-26X or Garmin GTX 45R	See Garmin Manual or Dynon manual
1	GTR-205x or GTR-225 or GTR 200	See Garmin Manual
1	Transponder Antenna	AV-00012
1	Emergency Locator Transmitter	AV-E-04
1	ELT Remote	E-04.5
1	ELT Antenna	E-04.8
1	VHF Comm Antenna	AV AV-17
2	Static Port	RIVET SD-42-BSLF
1	F Plastic tee	125 X 125 X 125 TEE
1	Pitot block	FF-1201, UHMW
1	Pitot tube	FF-1202, AT6-058X5/16
1	Pitot line tubing	FF-1216
1	Static line tubing	PT 1/4 OD POLYPROP. TUBE
1	Aithre Shield Ex 3.0	AV-00015, see SL-00010

OPTIONAL COMPONENTS		
2	Autopilot Servo	See Dynon or Garmin Manual
1	SV-AP-PANEL	See Dynon Manual
1	SV-KNOB-PANEL	See Dynon Manual
1	Garmin GMC 507 Autopilot Controller	See Garmin Manual
1	Landing light	See Aero LED Manual
2	Navigation / Strobe light	See Aero LED Manual
1	Cockpit light	LC ELC-01
1	SkyView HDX or G3X Dual EFIS / EMS	See Dynon or Garmin Manual
1	AOA indicator system	See Dynon or Garmin Manual
1	ADSB Antenna	AV-00014
1	ADSB Dynon Unit	SV-ADSB-472
1	ADSB Garmin Unit	GDL 50R (ADSB) or, GDL 51R (XM) or, GDL 52R (ADSB/XM)

PITOT, STATIC & AOA

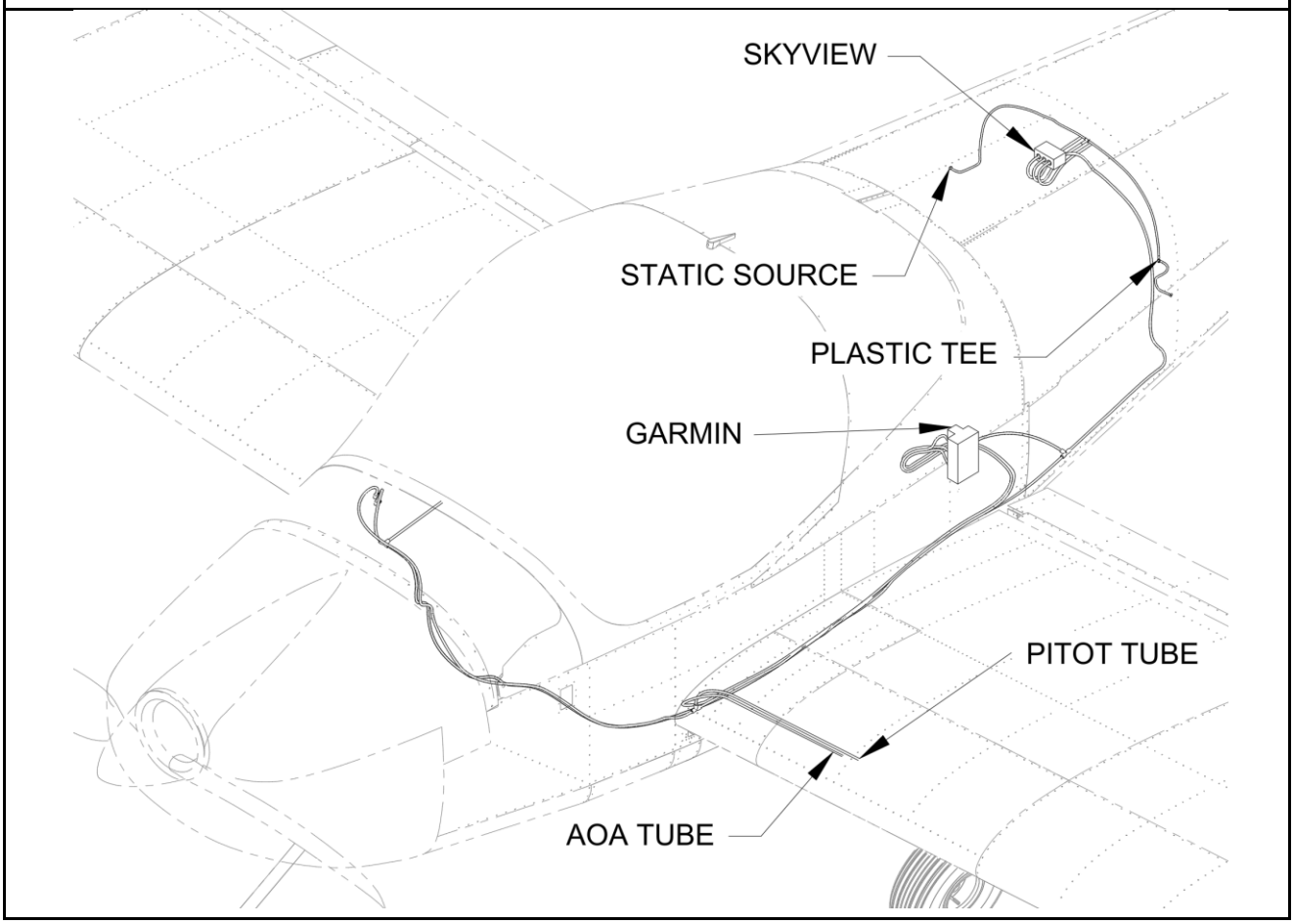

PITOT, STATIC & AOA COMPONENTS

Quantity	Part or Assembly Name	Part Number or Reference
2	Static Source	Rivet SD-42-BSLF
1	F Plastic Tee	125 X 125 X 125 TEE
1	Pitot Block	FF-1201, UHMW
1	Pitot Tube	FF-1202, AT6-058X5/16
2	FLF-00012	AOA Fitting
1	FLF-00015 or FLF-00015-1	Tube Guide (without O-ring) Tube Guide (with O-ring)
1	FLF-00016	Connector Tube
1	AOA Port	Rivet SD-42-BSLF

SERVICE

▲WARNING: ALWAYS HAVE AN APPROPRIATE FIRE EXTINGUISHER READILY AVAILABLE.

▲WARNING: BEFORE PERFORMING ANY MAINTENANCE OR REPAIRS TURN THE MASTER SWITCH 'OFF' AND DISCONNECT THE NEGATIVE (-) BATTERY CABLE FROM THE BATTERY.

■ CAUTION: REPLACEMENT COMPONENTS, WIRE, TERMINALS, AND FUSES MUST BE OF THE SAME TYPE AND RATING AS THE ORIGINAL PARTS.

Software updates are often available online for the Skyview HDX and Garmin G3X. The physical avionics components are not serviceable by the consumer unless otherwise noted in the manufacturer user manuals. A manufacturer authorized repair facility will perform diagnosis and service to the avionics components.

The Cockpit, Nav/Strobe and Landing lights have no user serviceable parts. Check the supply voltage and circuit connections. Replace the inoperable light if necessary.

SUPPLIES

SPECIAL TOOLS	EXPENDABLE
♦ Wire cutter ♦ Wire terminal crimper ♦ Wire Stripper ♦ Computer with internet ♦ USB Flash Drive / Memory Stick ♦ Razor Knife	♦ Wire terminals ♦ Plastic Tie Wraps **REPLACEABLE** ♦ See component list on page 9-2.

GENERAL

COMPONENT REPLACEMENT

See 9-2 through 9-4.

COMPONENT REMOVAL BY OWNER/OPERATOR

Using the KAI as a guide, owner/operators are authorized to remove a screen or any electrical component that is to be sent in for service.

PITOT / STATIC AND AOA SYSTEM COMPONENT REPLACEMENT

Special Tools	Razor Knife Wire cutter
Expendable	Plastic tie wraps
Replaceable	Connector Tubing
Service Rating	Line
Minimum Certification	LSA-RM or A&P
Additional References	KAI

REMOVAL

1. Make note of routing, location and orientation of the component to replace.
2. Remove the failing component.

INSTALLATION

1. Install a new component of equivalent properties and secure with plastic tie wraps.
2. Complete the Pitot /Static and/or AOA check as outlined in the RV-12iS production acceptance test document and Pitot/Static certification check (if applicable) by 14 CFR 91.413

LIGHT REPLACEMENT

▲WARNING: BEFORE PERFORMING ANY MAINTENANCE OR REPAIRS TURN THE MASTER SWITCH 'OFF' AND DISCONNECT THE NEGATIVE (-) BATTERY CABLE FROM THE BATTERY.

Special Tools	Wire cutter Wire terminal crimper Wire Stripper
Expendable	Wire terminals
Replaceable	Light Module
Service Rating	Line
Minimum Certification	Owner **and** SPC, LSA-RM or A&P
Additional References	KAI

REMOVAL

1. Remove the light and fastening hardware;
   Cockpit light: screws (3)
   Landing light: screws (6), bolts (2)
   Navigation light: Allen screw (1)
2. Label the wires that will be disconnected.
3. Unplug the wire terminals nearest to the light.

INSTALLATION

1. Install mating wire terminals on the replacement light.
2. Plug the light into the electrical system.
3. Install the new light and hardware.

AUDIO INPUT & ADJUSTMENT

All audio levels are set at the factory to default settings for audio balance. Audio volume levels may need adjustment following component replacement. Following is a list of signals and the corresponding adjustment within the component. (Example: Stall Warning tone level is controlled by the GTR205x "AUX 1" input level.)

Signal	EFIS	GTR205x Input Level	GMA245 Input Level
Stall Warning (If Installed)		AUX 1	AUX 1
EFIS Warning	Set-up Menu	AUX 2	ALERT 1
Music Level		Music Level (no XM)	ENTERTAINMENT 1 (XM Music)
NAV Audio 1 (VOR/ILS)			NAV AUDIO 1
GTN Main Audio (Touch Clicks)			ALERT 4 AUDIO

NOTE: Included in the EFIS Warnings are: AOA, traffic, terrain, oil pressure, airspeeds, etc., which can be configured in the EFIS itself.

Within the EFIS Set-up Menu:
1. Check that the Stall Warning is louder than example AOA tones.
2. Check that AOA example tones are louder than example EFIS warnings.
3. Check that XM or Bluetooth music is not louder than Stall Warning, AOA tones or EFIS warnings.

SERVICE SCHEDULE PROCEDURES

NOTE: THERE IS NO SCHEDULED MAINTENANCE OR SERVICE ON ANY OF THE AVIONICS OR OPTIONAL EQUIPMENT OTHER THAN THE PERIODIC REPLACEMENT OF THE ELT UNIT BATTERY. REFER TO THE ELT OWNERS MANUAL FOR THIS PROCEDURE. PERIODIC CHECKS SHOULD BE MADE AT A MINIMUM OF EACH CONDITION INSPECTION TO DETERMINE IF ANY SOFTWARE UPDATES HAVE BEEN ISSUED FOR THE EFIS/EMS OR GPS.

SOFTWARE UPDATES

Special Tools	Computer with internet access and Unit connection cable
Expendable	None
Replaceable	None
Service Rating	Line
Minimum Certification	Owner **and** SPC, LSA-RM or A&P
Additional References	F39

Refer to the applicable user manual for the instructions and website address.

THIS PAGE INTENTIONALLY LEFT BLANK

Chapter 10 - **UTILITY SYSTEMS**

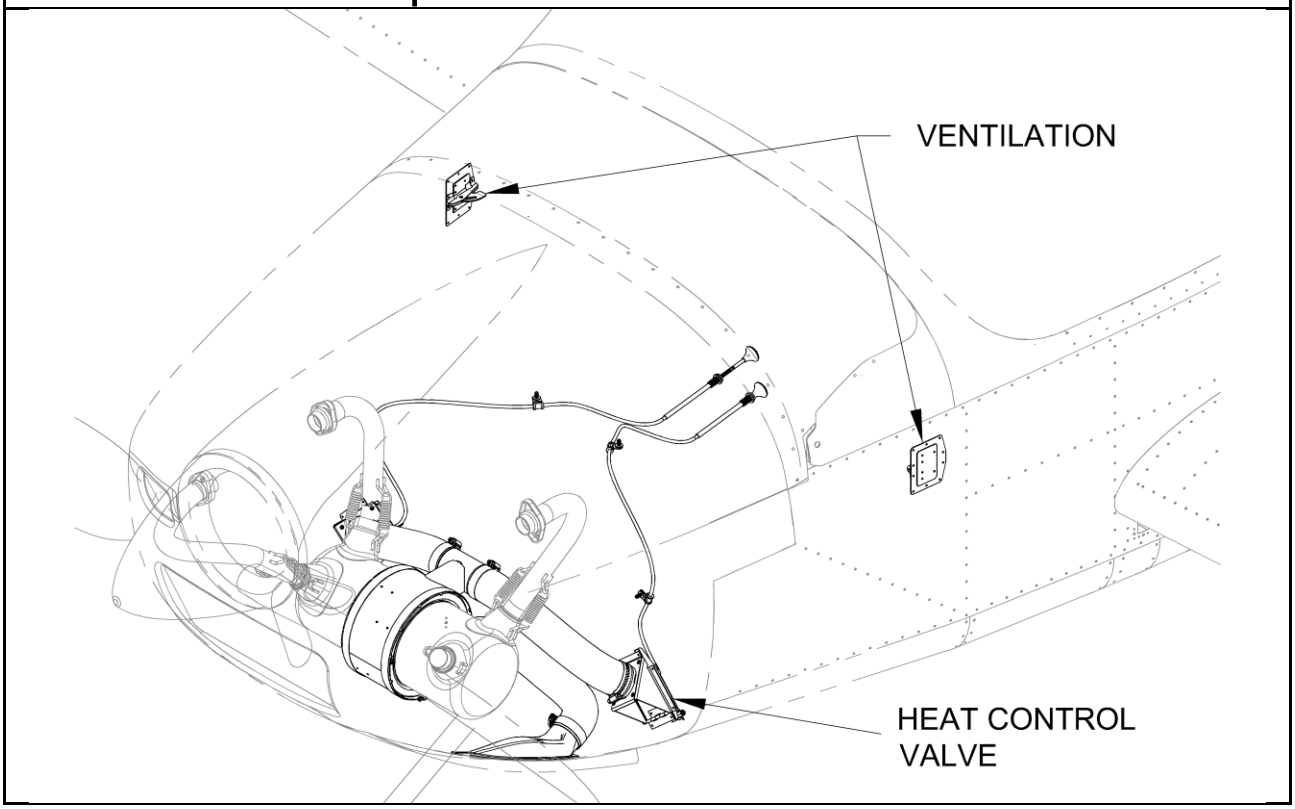

OVERVIEW 10-2
HEAT 10-2
Components 10-2
VENTILATION 10-3
Components 10-3
SERVICE 10-4
Supplies 10-4
Expendable 10-4
General 10-4
Vent door adjustment 10-4
Service Schedule Procedures 10-4

OVERVIEW

The aircraft utility systems are the systems that are not critical to flight. The heat system enables the occupants to control the cockpit temperature at each seating position with a push/pull cable. Hot air diverted from a heat muff on the exhaust system muffler provides cockpit heat. Cabin ventilation air can be controlled with either of the two vents, one on each side of the fuselage.

- ***NOTE: This maintenance manual is intended to be used in conjunction with the RV-12iS Kit Assembly Instructions (KAI) when completing maintenance or repair processes.***

HEAT

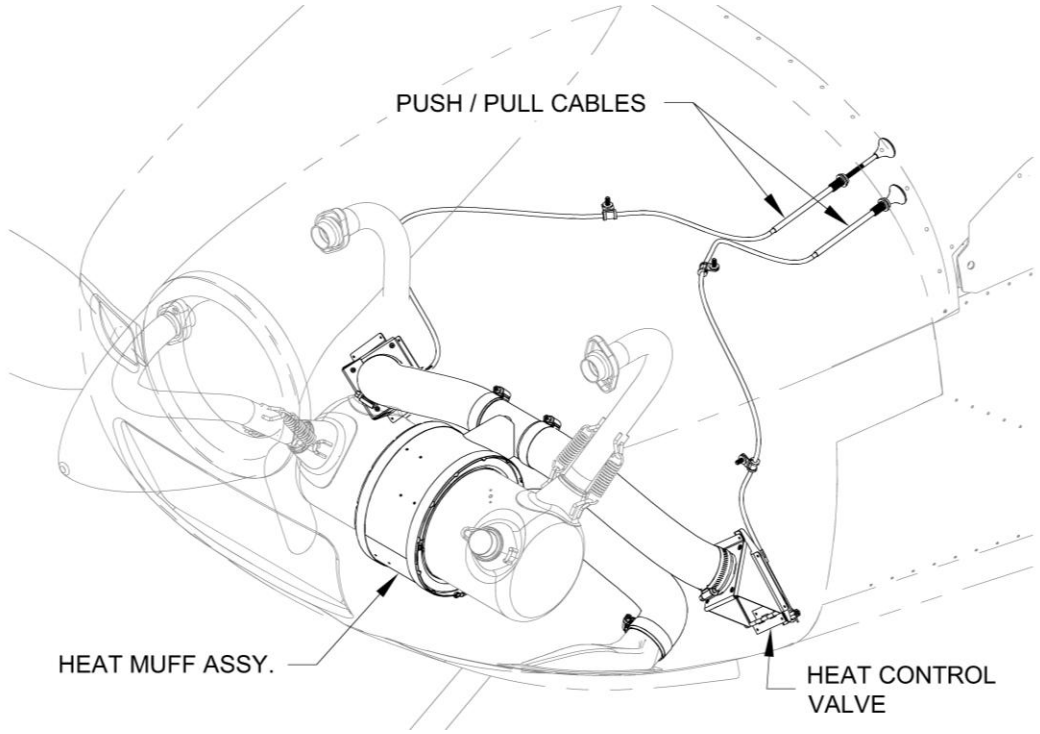

Air that passes through the heat muff plenum on the exhaust system muffler is routed to a cockpit controllable valve on each lower corner of the firewall. A push / pull cable on each valve controls a door to regulate the amount of air directed into the cockpit.

HEAT COMPONENTS

Quantity	Part or Assembly Name	Part Number or Reference
1	Heat Muff Assy.	FF-00090
2	Heat Control Valve	Vent-00001 Assy.
3	Heat Muff Hose, 2" SCAT	FF-00091
2	Push / Pull Cable	CT A-740 BLACK

VENTILATION

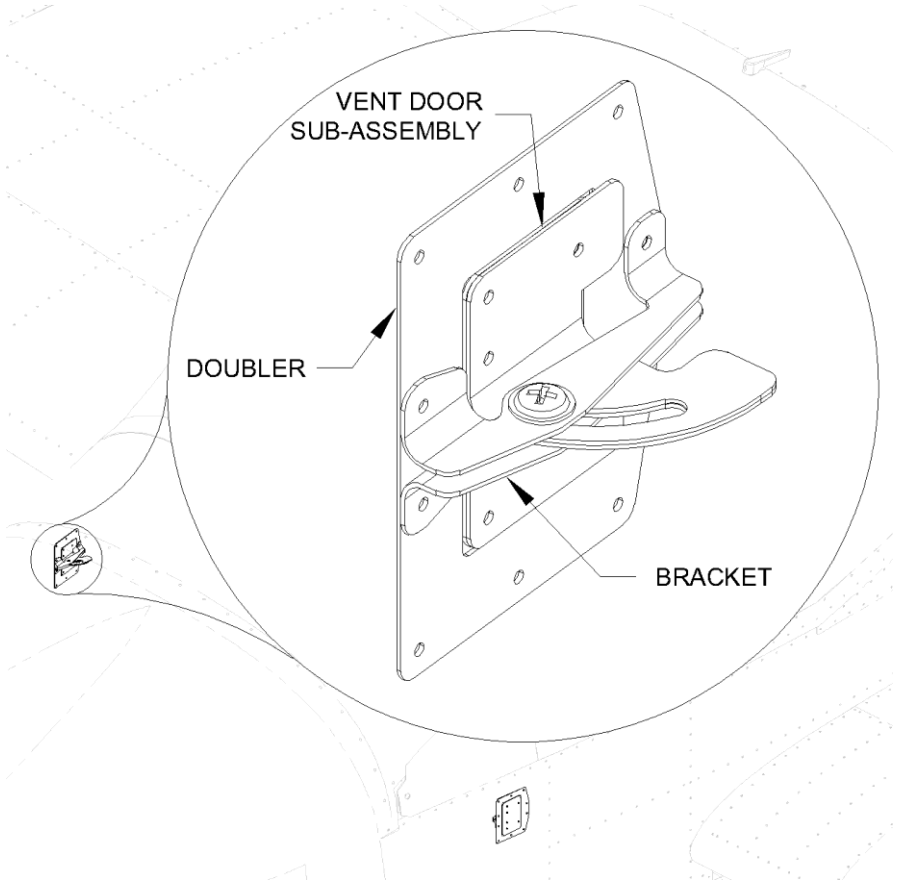

A hand-operated vent on each side of the cockpit provides cockpit ventilation. Each vent is a tip-out door installed on each fuselage side skin.

VENTILATION COMPONENTS

Quantity	Part or Assembly Name	Part Number or Reference
2	Vent brackets	F-1086
2	Vent doubler	F-1096
	Vent door sub-assembly	See shaded items below
2	Vent slide	F-1087
2	Vent door doubler	F-1092
2	Vent door	F-1093

SERVICE

The heating and vent systems do not require regular maintenance. If the push / pull cable's operation is not smooth at any time, lubricate the interior of the cable with spray lube.

The pre-flight and annual condition inspections are necessary to ensure all of the components remain in good condition.

SUPPLIES

EXPENDABLE
♦ Spray lubricant

GENERAL

VENT DOOR ADJUSTMENT

Expendable	None
Service Rating	Line
Minimum Certification	Owner **with** SPL, LSA-RM or A&P
Additional References	KAI

No maintenance is required on either of the fresh-air vents. A damaged vent is replaceable provided the fuselage skin is undamaged. The friction is adjusted using the attachment screw and nut. Tightening the nut will increase the friction and loosening will decrease it. Periodic adjustment may be required to provide enough friction that it stays in the selected position in flight, but is easy to move by hand.

SERVICE SCHEDULE PROCEDURES

NONE

Chapter 11 - **PROPELLER**

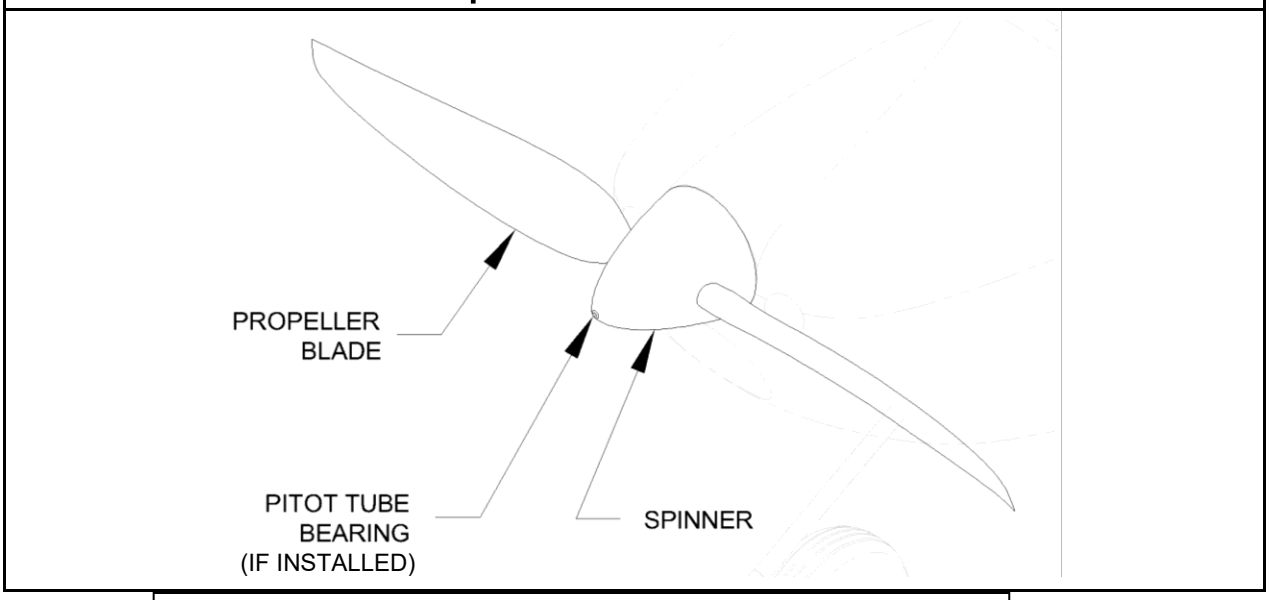

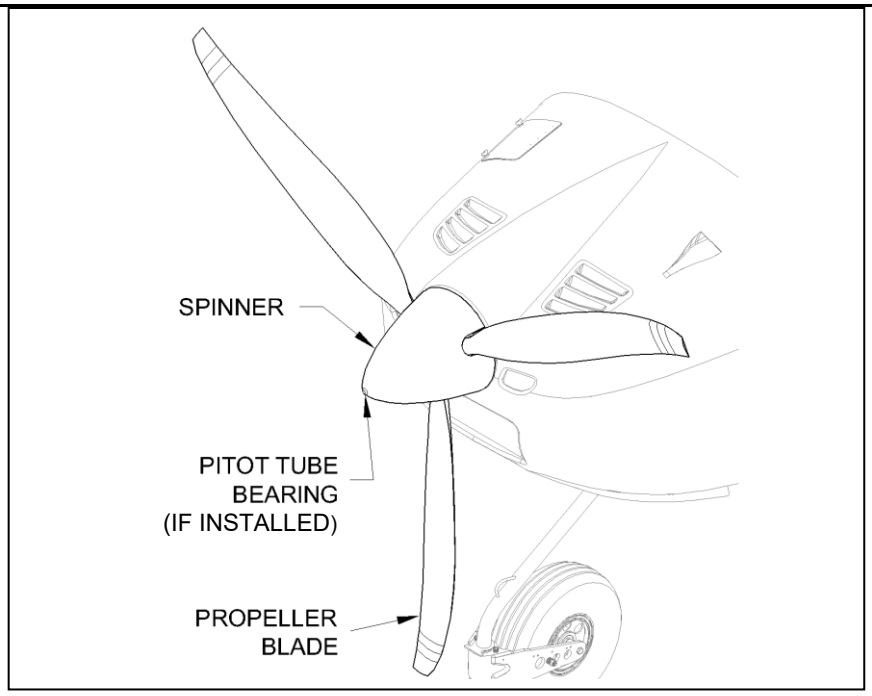

Overview 11-2
Components 11-2
SERVICE 11-2
Supplies 11-2
Special Tools 11-2
Expendable 11-2
Replaceable 11-2
Spinner and Pitot Tube 11-3
Prop & Hub 11-3

OVERVIEW

The RV-12iS is equipped with a ground adjustable Sensenich propeller. For instructions regarding adjust the propeller pitch, refer to the KAI and user manual provided with the propeller.

The current propeller manuals and/or specifications take precedence over referenced information in this manual. Current revisions to products or specifications made by the propeller manufacturer will not be reflected in this manual.

- ***NOTE: This addendum is intended to be used in conjunction with the RV-12iS maintenance manual and Kit Assembly Instructions (KAI) when completing maintenance or repair processes.***

COMPONENTS

Quantity	Part or Assembly Name	Part Number or Reference
1	Propeller, 2 Blade	2A0R5R70EN-V
1	Spinner cone, 2 Blade	S-1201
1	Optional Propeller, 3 Blade	3Y0R5 C70MY
1	Optional Spinner Cone, 3 Blade	S-01214

SERVICE

Brief instructions, referenced from the propeller manual, about caring for the prop and hub are included below. For complete information, refer directly to the propeller manual.

The spinner cone is constructed with a bushing for the Pitot tube. It has no scheduled maintenance requirement other than regular inspection and replacement of the bushing if excessive wear is detected.

SUPPLIES

TOOLS	EXPENDABLE
♦ 7/16 diam. wood dowel	♦ Notebook paper
	REPLACEABLE
	♦ Spinner cone ♦ Pitot tube bushing

SPINNER & PITOT TUBE (IF INSTALLED)

Inspect the Pitot tube and bushing for excessive wear using a clearance gauge. Make the clearance gauge by cutting a ¾ inch X 4 inch paper strip from common note book paper (typical thickness is about .003 inch). Make a mark on the strip ¾ inch from one end. Lay the paper strip lengthwise on the portion of the pitot tube that protrudes out of the spinner with the marked end positioned nearest to the spinner. Wrap the paper strip tightly around the radius of the pitot tube and attempt to insert it between the pitot tube and the bushing. If the paper strip can be inserted to the marked ¾ inch depth further inspection is needed.

Remove the spinner and inspect the portion of the pitot tube that turns within the bushing for wear damage. If any is present the pitot tube and the bushing should be replaced. To replace them see Section 47iS/U of the KAI.

If no wear damage is present on the pitot tube, just the bushing should be replaced.

Remove the worn bushing by driving it out from the aft side of the spinner using a 7/16 in. diameter dowel. Install the new bushing per Section 47 of the KAI.

PROP & HUB

•NOTE: THERE IS NO SPECIFIED SERVICE LIFE FOR THE PROPELLER. HOWEVER IT IS TO BE REMOVED FROM SERVICE WHEN IT NO LONGER MEETS THE CONTINUED AIRWORTHINESS REQUIREMENTS SPECIFIED BY THE MANUFACTURER.

The following will aid in the safe operation, longevity and appearance of the propeller.

- Do not spin your propeller above the Propeller RPM Limits specified by the manufacturer
- Check the hub clamping bolt torque after the first 5 hours and at each condition inspection. Always check in the tightening direction.
- Before each flight carefully Inspect the propeller blades and hub for looseness, any signs of damage, excessive wear or any other condition that would make the propeller unsafe to operate.
- When the propeller is not in use position it horizontally. If it is exposed to weather cover it with a weatherproof cover.
- Do not use the propeller as a tow-bar to move your aircraft.
- Apply a good quality automotive paste wax to the blades at least once a year. Avoid liquid waxes.
- Avoid running-up in areas containing loose stones and gravel.
- Loss of surface finish from the leading edge is considered normal wear and is dependent upon the amount of operation in rain and grit.
- Immediately following an impact of any kind remove the propeller from service until it has been inspected and passed by qualified personnel.

- Whenever there is evidence of rough operation check for proper bolt torque. For new installations it often helps to remove the propeller, rotate it 180° and reinstall.
- If vibrations are noticed or the pitch of the propeller has been changed, perform a dynamic balance of the propeller according to the manufacturer's instructions.
  NOTE: A propeller that is significantly out of balance can affect the AHRS accuracy and the lifetime of components in the aircraft.
- If the propeller shows any of the following signs of damage it must either be repaired (if possible) or retired from service:
  - Cracks in the metal hub or bolts
  - Loose metal leading edge
  - A crack across the blade
  - A long or deep crack along the blade length
  - Any portion of composite material missing
  - Obvious damage or wear beyond economical repair

Chapter 12 - FIREWALL FORWARD

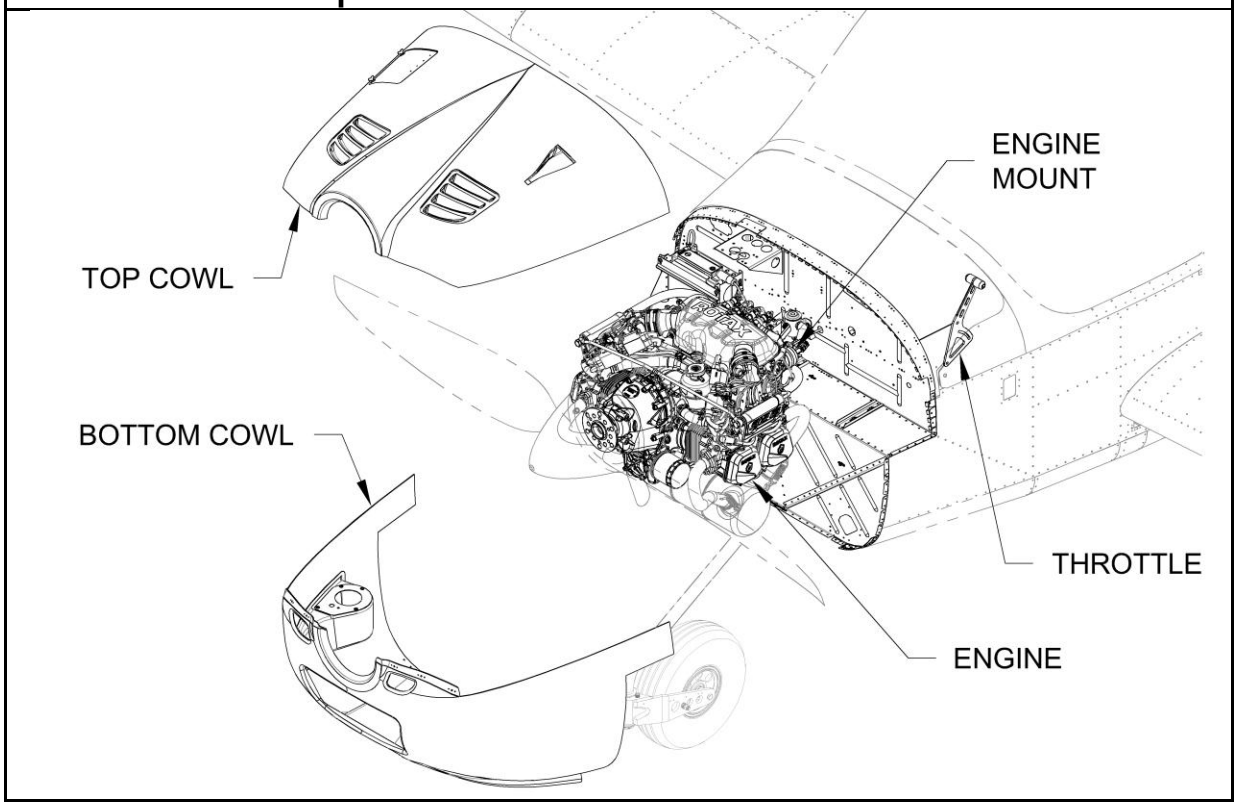

OVERVIEW 12-2
Components 12-2
Engine 12-3
Rotax 912iS 12-3
Rotax 912ULS 12-3
Spark Plugs 12-4
Ignition 12-4
SERVICE 12-4
Supplies 12-4
Special Tools 12-4
Expendable 12-4
Replaceable 12-4
General 12-5
Cowling removal 12-5
Spark plug replacement 12-5
Oil filter replacement 12-6
Engine oil level check 12-6
Engine coolant level check 12-7
Air filter removal & installation 12-7
Carburetor Syncronization 12-8
Verify Functionality of Throttle Return Spring 12-9
Throttle Cable Lubrication & Replacement 12-9
Throttle Return Spring Replacement 12-10
Service Schedule Procedures 12-10
Cowl hinge pin lubrication 12-10
Oil Hose Replacement 12-11
Cooling Hose Replacement 12-11
Manifold Pressure Hose Replacement 12-12
Engine replacement 12-12

OVERVIEW

NOTE: Reference Addendum A-5 when performing maintenance on alt air system.

Engine information is taken from Rotax documentation. For complete engine information refer to the Rotax engine documentation. **Note: Rotax is the primary authority for specifying the level of certification required by an individual performing maintenance or repair on a Rotax 912ULS or 912iS engine. Refer to the Rotax documentation to determine the qualifications or training required for any maintenance or repair action.**

The top and bottom engine cowling are a formed composite of fiberglass cloth and epoxy-resin. The cowl is attached using screws and segments of piano hinge. Hinge also joins the top and bottom cowl halves together. Adhesive heat shielding protects the inner surface of the cowl. On the 912ULS engine, there is a cockpit-mounted throttle and choke control. On the 912iS there is only a throttle control.

- ***NOTE: This maintenance manual is intended to be used in conjunction with the RV-12iS Kit Assembly Instructions (KAI) when completing maintenance or repair processes.***

COMPONENTS

Quantity	Part or Assembly Name	Part Number or Reference
1	Rotax 912ULS	Refer to Rotax documentation & See **Figure 26ULS**.
1	Rotax 912iS	Refer to Rotax documentation & See **Figure 26iS**.
1	Engine mount	WD-1220-PC
4	Vibration isolator	EA 22002-15
4	Engine Mount Bushing	Aluminum tube .376 X .528 X 1.9
	ULS Engine controls	See shaded items below
1	Throttle cable, 42”	CT-01202
1	Throttle cable, 38”	CT-01201
1	Dual Choke cable	CT-01203
	iS Engine controls	See shaded item below
1	Throttle cable, 35”	CT-01200
	Cowling	Shaded items below are ***iS*** only
1	Top cowl	Cowl, 12iS Top
1	Bottom cowl	Cowl, 12iS Bottom
1	Engine Air Duct	Cowl-00006
1	Upper cowl hinge	F-01201J-1
1	Upper cowl hinge	F-01201K-1
2	Mid cowl hinge	F-12116-1
2	Lwr cowl hinge	F-12117-1
2	Cowl attach plate	F-12130A
1	Cowl shield	EA EXHST/COWL SHIELD

ENGINE

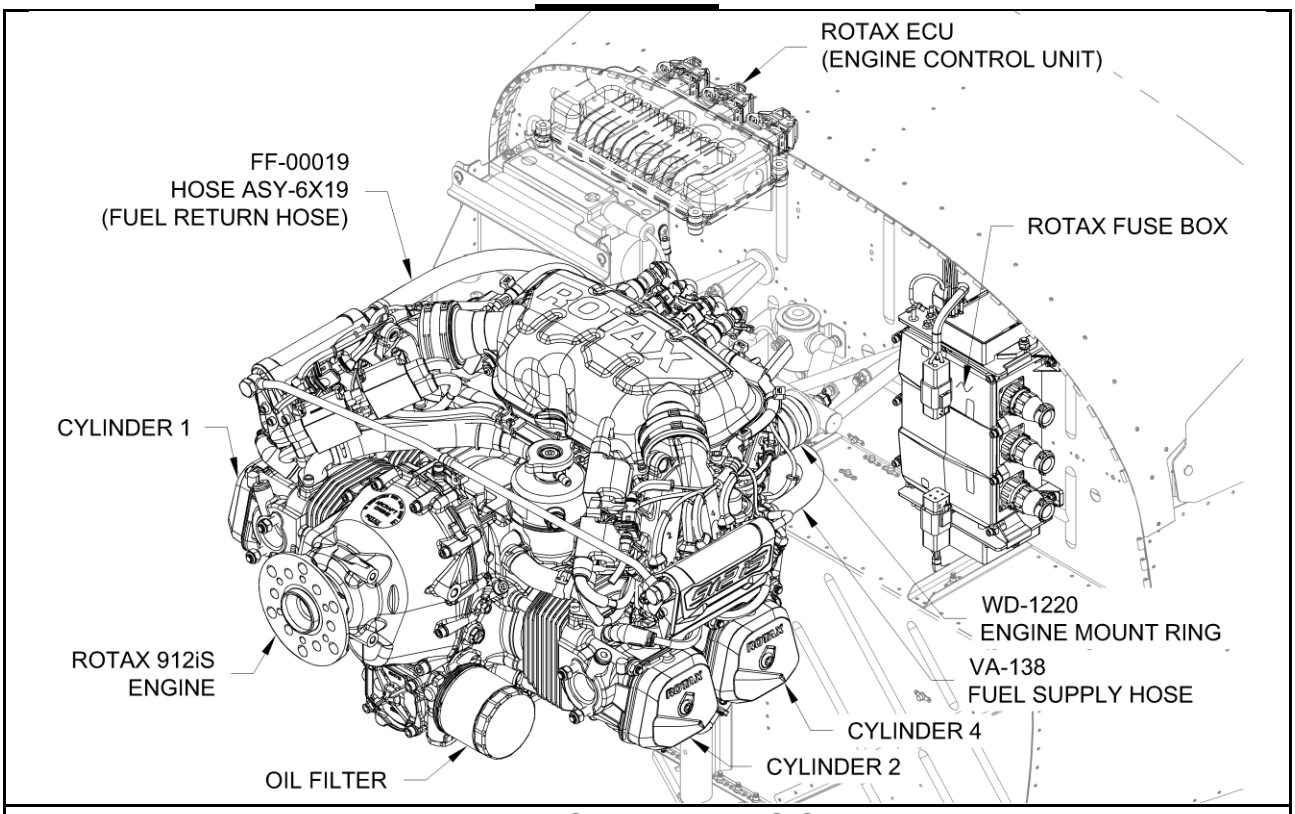

Figure 26iS: Rotax 912iS Sport

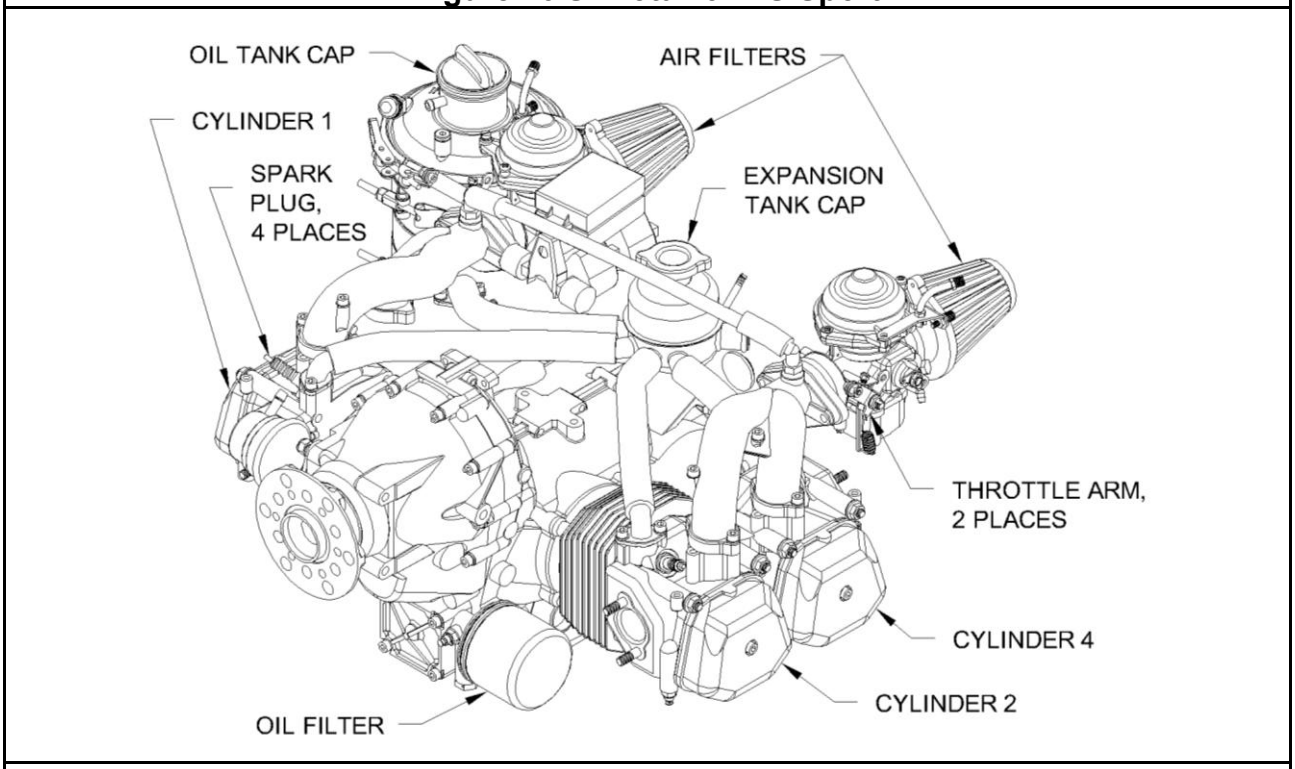

Figure 26ULS: Rotax 912ULS

Current engine product manuals and/or specifications take precedence over any

associated information referenced in this manual for convenience. This manual will not reflect current revisions to products or specifications made by the engine manufacturer. Refer to the engine manufacturer's operators manual for specifications.

SPARK PLUGS

Type: NGK DCPR8E
Socket: 5/8" spark plug
Electrode Gap: See Rotax Documentation

IGNITION

Dual Breakerless Capacitor Discharge
Firing Order: 1 - 4 - 2 - 3

SERVICE

Refer to the engine manual for full engine service details. The cowling does not require regular maintenance. The cowl attach hinge pins may be lubricated with a dry lubricant to ease removal and installation.

SUPPLIES

SPECIAL TOOLS	EXPENDABLE
♦ Spark plug gap tool (wire type) ♦ Oil filter wrench	♦ Spray lubricant ♦ Engine coolant ♦ Engine oil ♦ Dry lubricant ♦ Oil filter ♦ Safety wire ♦ Cotter pins
	REPLACEABLE
	♦ Hinge pins ♦ Spark Plugs ♦ Vibration isolator ♦ Air filter ♦ Push/Pull cable

GENERAL

COWLING REMOVAL

Expendable	None
Replaceable	Hinge pins
Service Rating	Line
Minimum Certification	Owner **and** SPC, LSA-RM or A&P
Additional References	KAI

Top Cowl:

1. Remove the screws (2) in the F-1240B Cover Plate located at the top rear of the cowling to access the aft cowl attach hinge pins.
2. Remove the top cowl fwd. attach screws (6), side pin anchor screws (2), aft and side hinge pins (4) and the top cowl.

Bottom Cowl:

1. Remove the bottom cowl attach screws (12) located on the bottom of the cowl.
2. **(iS only)** Remove the screws (4) that attach the air box filter plate to the engine air duct.
3. Disconnect the SCAT hose from the inlet vent at the bottom left.
4. Remove the aft hinge pins (4), and remove the lower cowl by lowering it (for the iS, the engine air duct should drop away from the air filter/plate).

INSTALLATION

1. Installation procedure is reverse of the removal procedure.

SPARK PLUG REPLACEMENT OR RE-INSTALLATION

Special Tools	5/8" spark plug socket Spark plug gap tool
Expendable	Heat conduction compound
Replaceable	Spark Plugs
Service Rating	Line
Minimum Certification	LSA-RM with Rotax Service certification or A&P with Rotax Service Certification.
Additional References	Rotax 912 Line Maintenance manual

1. Refer to the Rotax manual.

OIL FILTER REPLACEMENT

Special Tools	Oil filter wrench
Expendable	Oil Filter
Replaceable	None
Service Rating	Line
Minimum Certification	Owner **and** SPC, LSA-RM or A&P
Additional References	Rotax 912 Line Maintenance manual

1. Refer to the Rotax manual.

ENGINE OIL LEVEL CHECK

▲ WARNING: BEFORE PERFORMING ANY INSPECTION OR SERVICE, ALLOW THE ENGINE COMPONENTS TO COOL.

▲ WARNING: TURN OFF MASTER POWER AND BOTH IGNITION SWITCHES. DISCONNECT THE NEGATIVE (-) GROUND WIRE TO THE BATTERY.

Expendable	None
Replaceable	None
Service Rating	Line
Minimum Certification	Owner **and** SPC, LSA-RM or A&P
Additional References	Rotax 912 Operator Manual

1. Remove the oil tank cap.
2. Transfer oil from the crankcase to the oil tank by turning the propeller several times by hand in the direction of normal engine rotation. Transfer is complete when gurgling sounds come from the oil tank.

■ CAUTION: FOR LONG FLIGHTS REPLENISH OIL TO THE 'MAX.' MARK ON THE DIPSTICK.

● NOTE: THE QUANTITY DIFFERENCE BETWEEN 'MAX.' AND 'MIN.' MARKS ON OIL DIPSTICK IS 0.45L (0.5 QUART).

3. Oil level must be between the 'Max' and 'Min' marks on the dipstick.

ENGINE COOLANT LEVEL CHECK

▲ *WARNING: DO NOT REMOVE THE RADIATOR CAP FROM A HOT COOLING SYSTEM. SCALDING COOLANT WILL SPRAY.*

▲ *WARNING: BEFORE PERFORMING ANY INSPECTION OR SERVICE, ALLOW THE ENGINE COMPONENTS TO COOL.*

Expendable	Engine coolant
Replaceable	None
Service Rating	Line
Minimum Certification	Owner **and** SPC, LSA-RM or A&P
Additional References	Rotax 912 Operator Manual

1. Place a rag over the expansion tank cap.
2. Loosen cap to the first detent then step back for a few seconds.
3. Remove the expansion tank cap.
4. The expansion tank must be full of coolant.
5. Replace the cap.
6. The coolant level in the overflow bottle must be between the 'Max' and 'Min' marks.

AIR FILTER REMOVAL

Expendable	None
Replaceable	Air filter
Service Rating	Line
Minimum Certification	LSA-RM or A&P
Additional References	Rotax 912 Line Maintenance manual

1. Loosen the air filter clamp.
2. Remove the air filter.

INSTALLATION

1. Installation procedure is reverse of the removal procedure.

CARBURETOR SYNCHRONIZATION (ULS)

Special Tools	1 - Vacuum gauge set
Expendable	None
Replaceable	None
Service Rating	Line
Minimum Certification	LSA-RM with Rotax Service certification or A&P with Rotax Service certification
Additional References	Rotax Line Maintenance Manual

Refer to the Rotax Line Maintenance manual

● ***NOTE: WHEN CHECKING THE IDLE SPEED DURING THE ADJUSTMENT PROCEDURE ONLY PULL LIGHTLY ON THE THROTTLE CONTROL UNTIL YOU JUST FEEL THE IDLE STOPS ON THE CARBURETORS. A HEAVY PULL ON THE THROTTLE CONTROL WILL FLEX THE THROTTLE ARMS AND GIVE AN INACCURATE IDLE SPEED.***

● ***NOTE: IF THE THROTTLE HANDLE IS HELD FULLY AT IDLE FOR AN EXTENDED PERIOD THE IDLE MAY CREEP DOWN TO APPROXIMATELY 1550 RPM. THIS IS PERMISSIBLE WHEN SETTING UP THE CARBURETORS BUT DURING NORMAL GROUND OPERATIONS THE IDLE SPEED SHOULD BE KEPT AT OR ABOVE 1650 RPM, OR WHATEVER IDLE SPEED IS REQUIRED TO ALLOW THE ENGINE TO RUN SMOOTHLY. OPERATING AT IDLE SPEEDS WHERE THE ENGINE IS MAKING A KNOCKING/RATTLE TYPE NOISE WILL CAUSE GEARBOX DAMAGE.***

● ***NOTE: OFTEN TIMES WARMING THE ENGINE BY RUNNING IT ON THE GROUND DOES NOT QUITE BRING IT UP TO NORMAL OPERATING TEMPERATURES. THIS WILL HAVE A SLIGHT EFFECT ON WHAT THE ACTUAL IDLE RPM WILL BE ONCE THE AIRPLANE HAS BEEN FLOWN FOR A FEW MINUTES (FULLY WARMED UP). THE DIFFERENCE TENDS TO BE A 50 – 75 RPM INCREASE. FOR THIS REASON, UNLESS YOU ARE DOING THE CARBURETOR SYNCHRONIZATION PROCEDURE IMMEDIATELY AFTER FLYING THE AIRPLANE, ADJUSTING FOR AN IDLE SPEED NEAR THE BOTTOM OF THE RECOMMENDED RANGE WILL NET YOU A PROPER IDLE OF ABOUT 1650 RPM AFTER THE ENGINE IS FULLY WARMED.***

● ***NOTE: VERIFY THE IDLE SPEED AND ADJUST AS NECESSARY TO ACHIEVE 1600-1650 RPM AND SMOOTH ENGINE OPERATION (REMEMBER TO ONLY PULL LIGHTLY AGAINST THE CARBURETORS IDLE STOPS).***

VERIFY FUNCTIONALITY OF THROTTLE RETURN SPRING(S)

Special Tools	None
Expendable	None
Replaceable	None
Service Rating	Line
Minimum Certification	Owner **and** SPC
Additional References	KAI

1. This section must be done with the aircraft outside.
2. Chock main wheels, tie-down tail.
3. BRAKES: Apply FULL.
4. Start engine, check for oil pressure functioning and showing pressure.
5. Warm the engine to 122°F.
6. THROTTLE- Completely loosen throttle friction knob and observe throttle advance rate.

   If the throttle advances rapidly to a partial position, then slowly advances the throttle to full, the spring(s) are functioning correctly. This may take up to 15 seconds. If the throttle is not pulled to full either the throttle cable needs lubrication or the throttle return spring(s) or throttle cable need to be replaced.

THROTTLE CABLE LUBE & REPLACEMENT

Special Tools	None
Expendable	Lightweight Lubricant (LPS2)
Replaceable	CT-01200 (iS) or CT-01202 (ULS)
Service Rating	Line
Minimum Certification	LSA-RM or A&P
Additional References	KAI

If the throttle is not pulled to full during verification (see Verify Functionality of Throttle Return Springs section) remove and lubricate the cable.

REMOVAL

1. Remove F-01244-L Fwd Tunnel Cover and F-01245-L Aft Tunnel Cover and loosen the nut clamping the cable to the throttle lever. Remove the large lock nut from the cable housing attach bracket. Slide the cable thru the bracket. Remove the second large nut from the cable.
2. Disconnect the cable fwd of the firewall and slide it out the fwd side. See KAI Sections 49U or 49iS.

INSTALLATION

1. Lubricate the throttle cable internally by holding it vertically, applying lubricant to the cable and allowing it to run down inside the cable housing while operating it. Installation procedure is reverse of the removal procedure.
2. If the problem persists after the cable has been lubed replace the throttle springs. See the Throttle Return Spring Replacement section. If the problem persists replace the throttle cable.

THROTTLE RETURN SPRING REPLACEMENT

Special Tools	None
Expendable	None
Replaceable	SPRING-00002-L/R-1 (ULS)
Service Rating	Line
Minimum Certification	Owner **and** SPC, LSA-RM or A&P
Additional References	KAI

REMOVAL

1. Remove SPRING-00002-L/R-1 as shown in KAI Section 49U.

INSTALLATION

1. Installation procedure is reverse of the removal procedure.
2. Perform the carburetor sync procedure found in this section. Reference: Service Bulletin 18-03-06

SERVICE SCHEDULE PROCEDURES

COWL HINGE PIN LUBRICATION

Expendable	Dry lubricant
Replaceable	None
Service Rating	Line
Minimum Certification	Owner **and** SPC, LSA-RM or A&P
Additional References	KAI

1. With the cowl hinge pins removed wipe each hinge pin clean.
2. Polish the pins with a fine Scotchbrite® type pad if fretted.
3. Apply lubricant along the length of each hinge pin.

OIL HOSE REPLACEMENT

▲ *WARNING: BEFORE PERFORMING ANY INSPECTION OR SERVICE ALLOW THE ENGINE COMPONENTS TO COOL.*

Expendable	Plastic tie-wrap 8in
Replaceable	Oil Supply Hose, Oil Cooler Hose, Oil Return Hose, Oil Tank Vent Tube, Oil Vent Interconnect
Service Rating	Line
Minimum Certification	Owner **and** SPC, LSA-RM or A&P
Additional References	KAI

REMOVAL

1. Remove Cowl (12-4).
2. Drain oil system per Rotax Line Maint. Manual including draining of the oil cooler.
3. Cut tie-wraps and detach cushioned clamps from oil hoses.
4. Disconnect and remove oil hoses from the oil tank cover assembly, engine and oil cooler.

INSTALLATION

1. Installation of new hoses and tubes is reverse of removal procedure.
2. Perform oil purge procedure detailed in Rotax Service Instruction SI-912-018.

COOLING HOSE REPLACEMENT

▲ *WARNING: BEFORE PERFORMING ANY INSPECTION OR SERVICE ALLOW THE ENGINE COMPONENTS TO COOL.*

Expendable	Plastic tie-wrap 8in
Replaceable	FF-1208A, FF-1208B, FF-1220
Service Rating	Line
Minimum Certification	LSA-RM or A&P
Additional References	KAI

REMOVAL

1. With a catch pan located below the initial hose connection being removed, remove the spring clamp and disengage the hose from the hose nipple.
2. Disconnect hoses from engine water pump, radiator, and L & R coolant tubes.
3. Cut new hoses to same length as old ones.
4. Remove spring clamps from old hoses and install on new hoses.

INSTALLATION

1. Installation procedure is reverse of removal procedure.
2. Refer to Rotax Line Maint. Manual to refill coolant.

MANIFOLD PRESSURE HOSE REPLACEMENT (ULS)

Tools	Wire cutters, straight slot screwdriver(for prying hose)
Expendable	Tie wrap
Replaceable	Manifold pressure hose
Service Rating	Line
Minimum Certification	LSA-RM with Rotax Service certification or A&P with Rotax Service certification
Additional References	KAI

REMOVAL

1. Cut the tie wrap attaching the manifold pressure hose to the manifold pressure sensor wires.
2. Remove the hose from the manifold pressure sensor and the from the compensating tube assembly.

INSTALLATION

1. Cut the new hose to the length specified in the KAI.
2. Installation is reverse of removal.

ENGINE REPLACEMENT

Tools	Torque wrench, many common tools as req'd.
Expendable	Loctite 221, coolant, engine oil
Replaceable	Engine
Service Rating	Line
Minimum Certification	LSA-RM with Rotax Service certification or A&P with Rotax Service certification
Additional References	KAI, Rotax Line and Heavy Maintenance Manual

REMOVAL

1. Remove battery ground cable from negative battery terminal.
2. Disconnect Heat valve SCAT hoses from heat muff.
3. **(ULS only)** Disconnect fuel pump drain tube and hose where attached to the engine.
4. **(ULS only)** Disconnect oil pressure, EGT, and CHT wires from cylinder heads. Remove tie-wraps securing wire runs to various engine components as required.
5. Move fuel selector valve to "UP-OFF" position.
6. **(ULS only)** Place suitable container under gascolator. Remove gascolator bottom plug and drain fuel from system. NOTE: This is a relatively slow process.

■ *WARNING: EXPECT SOME FUEL DRAINAGE TO OCCUR AS THE HOSE CONNECTIONS ARE REMOVED. USE PROTECTIVE GLOVES AND HAVE SHOP RAGS CLOSE BY.*

7. Disconnect fuel hoses at firewall. Some fuel may still be in hoses.
8. Place drain pan beneath engine and drain oil by disconnecting oil hose at pump. Elevate hose to prevent siphoning oil from tank.
9. Burp engine.
10. Disconnect oil return hose from bottom of engine case.
11. Disconnect oil return hose (where tank is marked "IN") from top of oil tank.
12. Drain cooling system per Rotax Line Maint. Manual.
13. Disconnect throttle and choke (ULS only) cable(s) from carburetor or throttle body per KAI.
14. If the propeller is to be removed from the engine, measure propeller blade pitch for reference at reinstallation.
15. **(iS Only)** Remove right side EFIS screen from instrument panel. If not equipped, remove fwd. upper skin from fuselage.
16. **(iS Only)** Disconnect both ECU harness cables from the ECU module (refer to Rotax documentation)
17. **(iS Only)** Remove harness cable cover plate from firewall and reposition both cables to fwd. of the firewall.
18. Disconnect the pitot line from the aft end of the pitot tube.

Refer to KAI for remainder for details on detaching the engine from front of the fuselage.

INSTALLATION

1. Installation is reverse of removal. Torque fasteners as specified.
2. Refill coolant system to recommended level.
3. Refill oil to recommended level.

4. Purge oil system, etc. refer to the Rotax Line Maintenance Manual for this and other procedures during and after installation. Also refer to applicable KAI sections throughout

the installation.

THIS PAGE INTENTIONALLY LEFT BLANK

Chapter 13 - **FUEL SYSTEM**

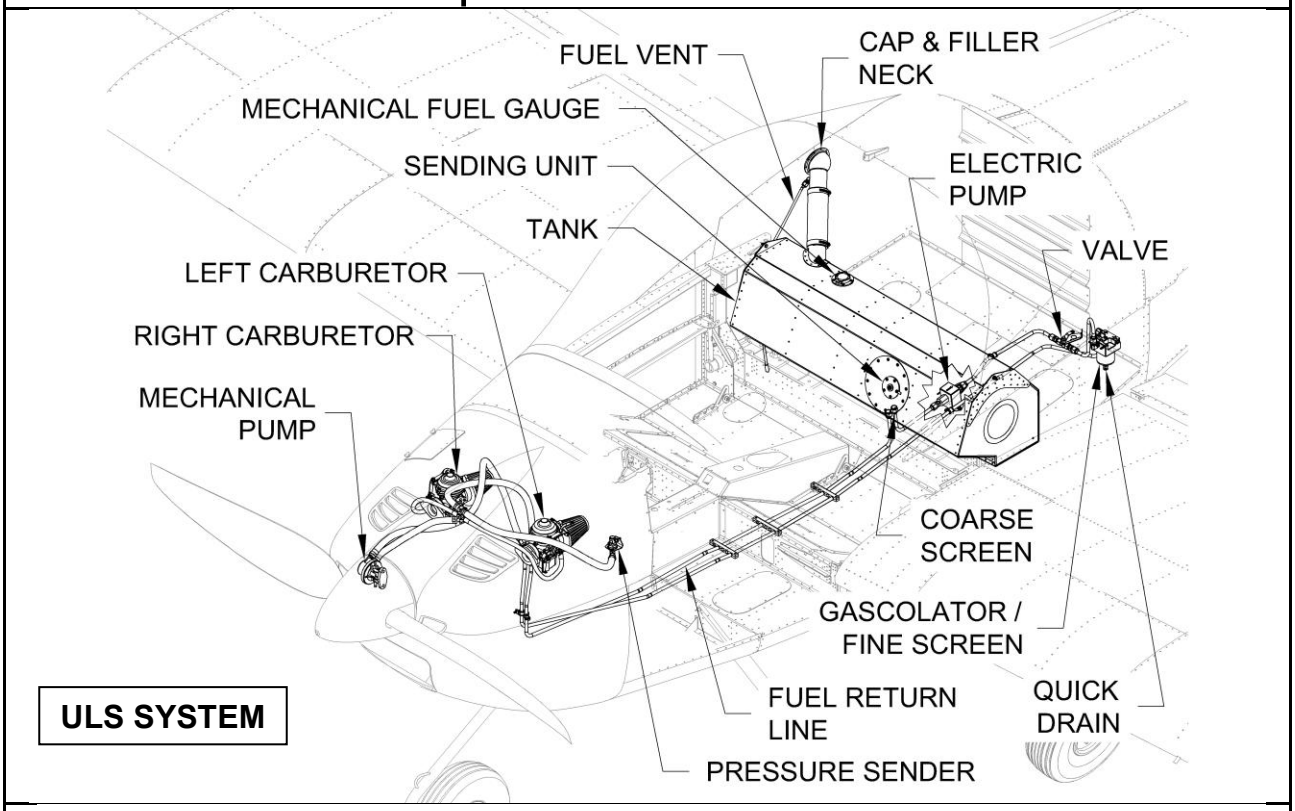

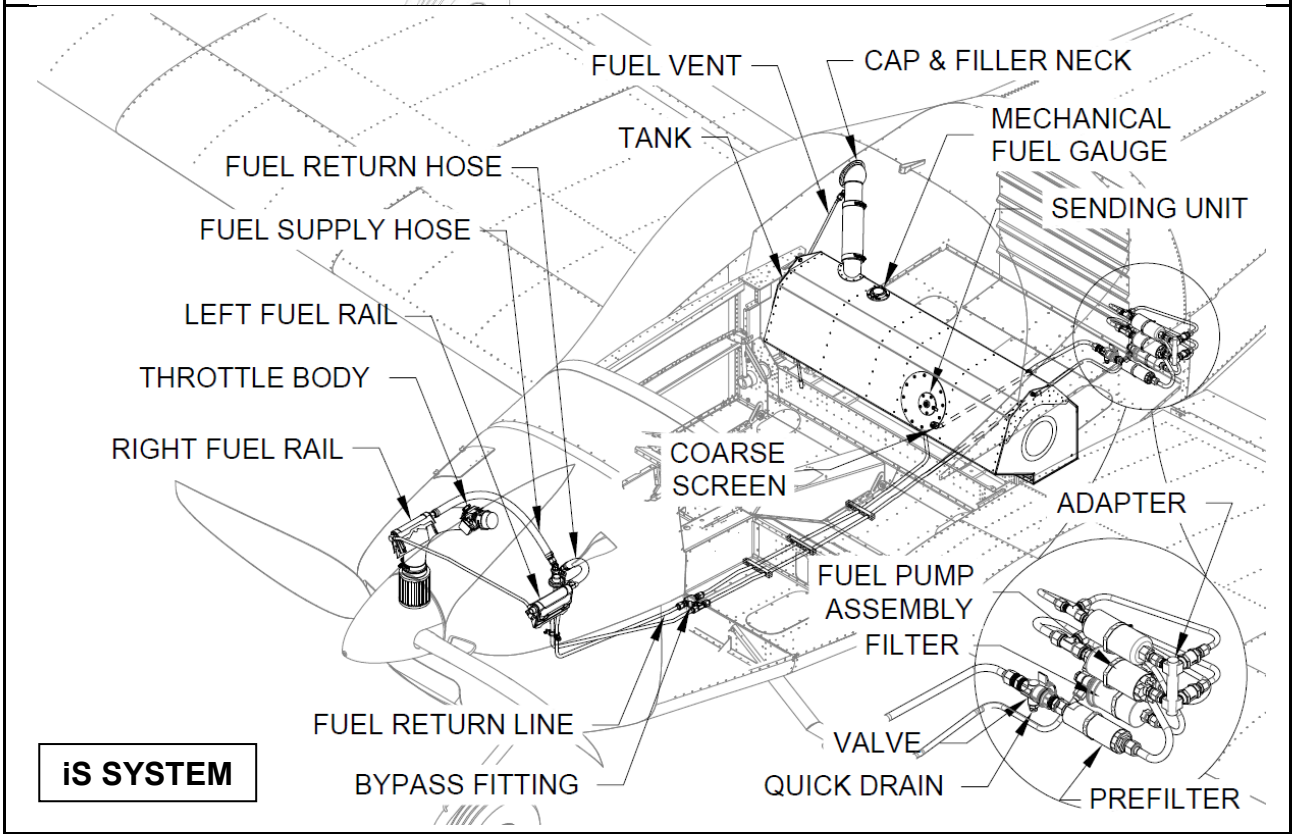

OVERVIEW 13-2
Components 13-3
Fuel System Schematic 13-4
SERVICE 13-6
Supplies 13-6
Special Tools 13-6
Expendable 13-6
Replaceable 13-6
General 13-6
Draining the fuel system 13-7
Fuel tank removal 13-8
Installation 13-8
Fuel system component removal 13-8
Installation 13-9
Service Schedule Procedures 13-9
Gascolator cleaning 13-9
Installation 13-10
Coarse fuel tank screen removal 13-10
Installation 13-10
Fuel pressure/return assembly replacement 13-10
Installation 13-11
Fuel pressure hose fllush 13-11
Fuel return hose flow check 13-12
Fuel drain hose replacement 13-13
Removal 13-13
Installation 13-13
Fuel prefilter cleaning/inspection 13-13
Main filter replacement 13-14
Long Term Storage 13-15
Draining The Carburetor Bowl 13-15

OVERVIEW

The portion of the fuel system common to both engine models consists of a filler neck and cap assembly, 20.2 gallon fuel tank, tank fuel level sending unit, mechanical fuel level gauge, a finger screen fuel strainer at the bottom tank outlet preventing larger foreign objects from progressing through the fuel system, and a fuel return line.

ULS Engine

The finger screen fuel strainer outlet feeds (in order as listed) a single ES 40135 12V DC solid-state electric fuel pump located under the mid baggage floor cover. This serves as an auxiliary fuel pump to the mechanical engine driven pump. The aux. pump operates full time. The fuel pump outlet feeds (in order as listed) a remote controlled fuel shut-off valve, gascolator/filter, main fuel line routed fwd. to the firewall, engine driven fuel pump, and then a fuel distribution manifold feeding both carburetors, the fuel pressure sensor, and hose that connects to the fuel return line.

iS Engine

The finger screen fuel strainer outlet feeds (in order as listed) a maintenance fuel shut-off/sump drain valve, pre-filter, dual pump high pressure fuel pump assembly, manifold block for fuel pump output pressure transducer, main fuel filter with a check valve and by-pass line (safety bypass in case of restricted fuel filter), a metered bypass/loop-back

manifold assy. located below the throttle control, main line routing to the firewall, hose routing from firewall to inlet port on fuel rail (engine right rear), hose connecting outlet of fuel pressure regulator (engine left rear) to firewall fitting and line feeding back to low pressure side of the bypass manifold assy., and then back to the fuel tank.

- ***NOTE: This maintenance manual is intended to be used in conjunction with the RV-12iS Kit Assembly Instructions (KAI) when completing maintenance or repair processes.***

COMPONENTS

Quantity	Part or Assembly Name	Part Number or Reference
1	Fuel cap	T-00007A
1	Filler neck assembly	T-01231
1	Fuel tank	See KAI
1	Fuel strainer/coarse finger screen (ULS)	VA-261
1	Fuel strainer/coarse finger screen (iS)	VA-265-1
1	Fuel shut-off valve .5 Pipe	FLF-00027-001
1	Fuel quick-drain	CAV-160
1	Fuel sending unit	IE F-385B
1	ADAPTOR, .25X.25X.25X.125 NPT	FLF-00013-1
1	Mechanical Fuel Gauge	IE-00001
	ULS Engine only	Shaded parts below
1	Electric fuel pump	ES 40135
1	Gascolator	GAS-6
1	Left carburetor	See Rotax Documentation
1	Right carburetor	See Rotax Documentation
1	Mechanical fuel pump	See Rotax Documentation
1	Fuel Pressure/Return hose assy.	VA-216
1	Fuel pressure sender	See KAI
1	Fuel Valve Cable Assy., 100"	CT-01204
	iS Engine only	Shaded parts below
1	Fuel Drain Assy.	See KAI
1	Pre-filter	ES AIRFLOW FILTER-1
2	Rotax Fuel Pump	ROTAX 889731
1	Main Pump Check Valve	FUEL-CK375-MN
1	Aux Pump Check Valve	FUEL-CK375-MN
1	Fine Filter By-pass Check Valve	FUEL-CK375-NM-14-BRP
1	Fuel Filter	874 060 Fuel Filter
1	Bypass Fitting Assy.	See KAI

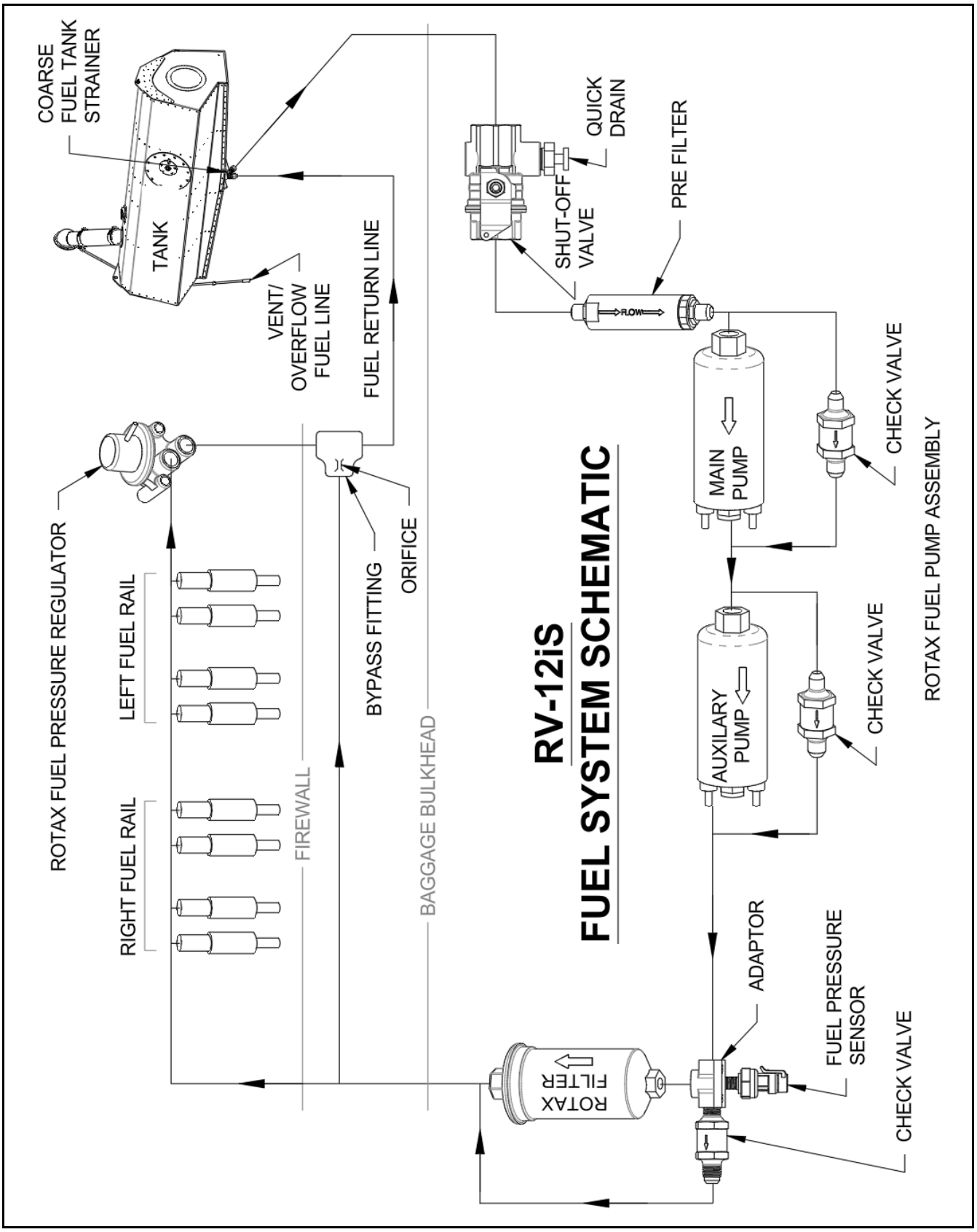
RV-12iS
FUEL SYSTEM SCHEMATIC
COARSE FUEL TANK STRAINER
TANK
VENT/ OVERFLOW FUEL LINE
FUEL RETURN LINE
QUICK DRAIN
SHUT-OFF VALVE
PRE FILTER
FLOW
MAIN PUMP
CHECK VALVE
ROTAX FUEL PUMP ASSEMBLY
ROTAX FUEL PRESSURE REGULATOR
LEFT FUEL RAIL
RIGHT FUEL RAIL
BYPASS FITTING
ORIFICE
FIREWALL
BAGGAGE BULKHEAD
AUXILARY PUMP
CHECK VALVE
ADAPTOR
FUEL PRESSURE SENSOR
CHECK VALVE
ROTAX FILTER

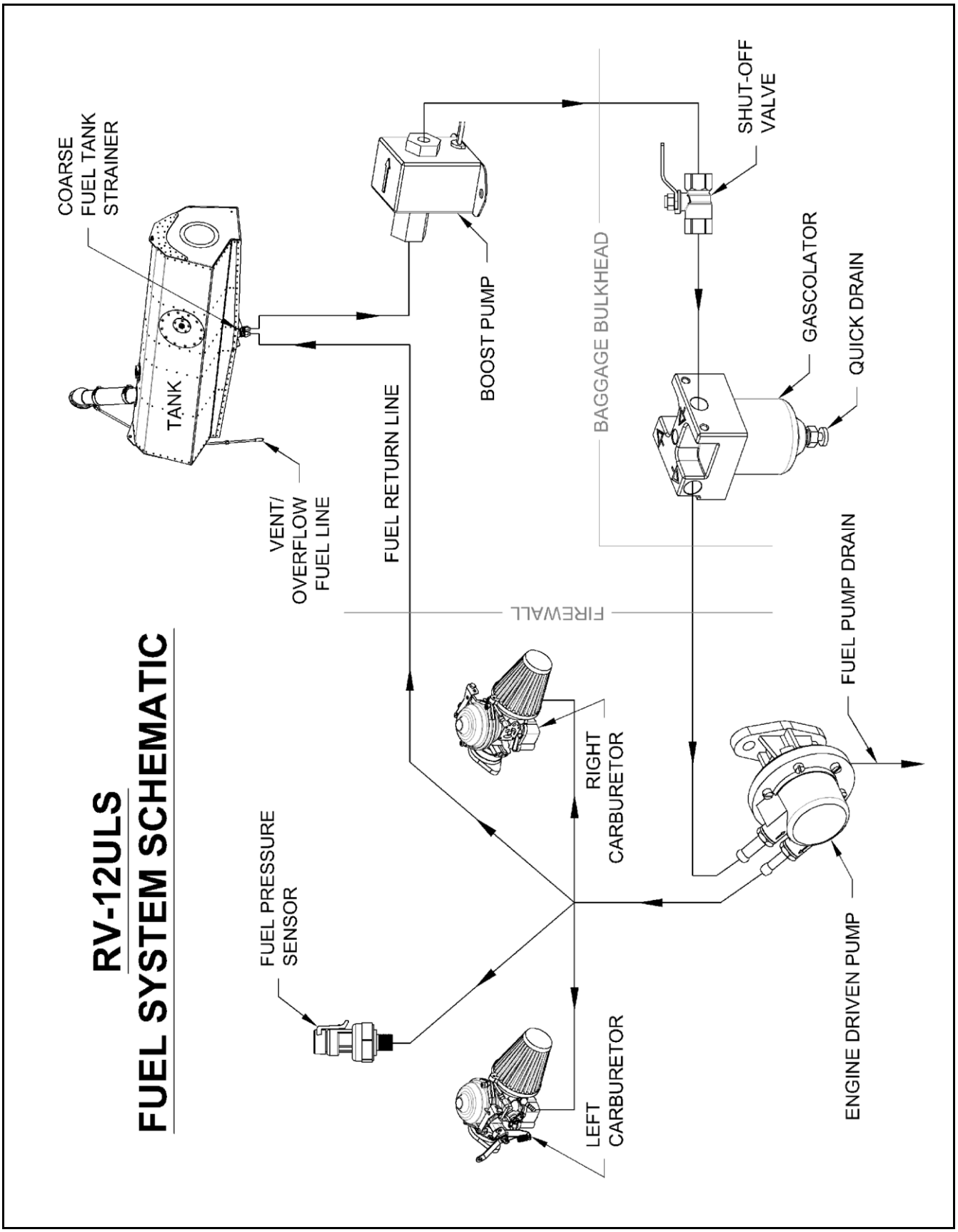
RV-12ULS
FUEL SYSTEM SCHEMATIC
COARSE FUEL TANK STRAINER
TANK
VENT/ OVERFLOW FUEL LINE
FUEL RETURN LINE
BOOST PUMP
BAGGAGE BULKHEAD
SHUT-OFF VALVE
GASCOLATOR
QUICK DRAIN
FIREWALL
FUEL PUMP DRAIN
RIGHT CARBURETOR
FUEL PRESSURE SENSOR
LEFT CARBURETOR
ENGINE DRIVEN PUMP

SERVICE

▲ ***WARNING: ALWAYS HAVE AN APPROPRIATE FIRE EXTINGUISHER READILY AVAILABLE.***
▲ ***WARNING: BEFORE PERFORMING ANY MAINTENANCE OR REPAIRS TURN THE MASTER SWITCH 'OFF' AND DISCONNECT THE NEGATIVE (-) BATTERY CABLE FROM THE BATTERY.***
■ ***CAUTION: REPLACEMENT FUEL SYSTEM COMPONENTS MUST BE EQUIVALENT TO THE ORIGINAL PARTS.***
● ***NOTE: CLOSE THE FUEL VALVE TO SERVICE OR REMOVE COMPONENTS THAT ARE FORWARD OF THE FUEL VALVE. DRAIN THE FUEL SYSTEM TO SERVICE OR REMOVE COMPONENTS AFT OF THE FUEL VALVE.***

SUPPLIES

SPECIAL TOOLS	EXPENDABLE
♦ Safety wire pliers ♦ Fuel Container ♦ 1/8" NPT x 3/8" hose barb (ULS) ♦ 1/4" NPT x 3/8" hose barb (iS) ♦ 3/8" ID fuel hose ♦ Protective Gloves ♦ Shop Towels ♦ Torque Wrench	♦ Safety wire ♦ Pipe Thread Sealant
	REPLACEABLE
	♦ Gas-5 Screen (ULS) ♦ Gas-5 O-ring gasket (ULS) ♦ Fuel Filter (iS)

GENERAL

▲ ***WARNING: ALWAYS HAVE AN APPROPRIATE FIRE EXTINGUISHER READILY AVAILABLE.***
▲ ***WARNING: BEFORE PERFORMING ANY MAINTENANCE OR REPAIRS TURN THE MASTER SWITCH 'OFF' AND DISCONNECT THE NEGATIVE (-) BATTERY CABLE FROM THE BATTERY.***

DRAINING THE FUEL SYSTEM

Special Tools	1/8" NPT x 3/8" hose barb (ULS) 1/4" NPT x 3/8" hose barb (iS) 12" x 3/8" I.D. fuel hose Fuel Container Protective Gloves
Expendable	Pipe Thread Sealant
Replaceable	None
Service Rating	Line
Minimum Certification	Owner **and** SPC, LSA-RM or A&P
Additional References	KAI

• ***NOTE: IF THERE IS A FAIR AMOUNT OF FUEL IN THE TANK, REDUCE THE DRAIN TIME BY FIRST SIPHONING OUT AS MUCH AS POSSIBLE. A SMALL WEIGHT SECURELY ATTACHED TO THE END OF A FLEXIBLE SIPHON HOSE WORKS WELL FOR REACHING THE TANK'S BOTTOM.***

1. Move the fuel selector control to the 'OFF' position (ULS).
2. Remove the access cover plate located below the gascolator (ULS) or fuel drain assy and shut off the maintenance valve. (iS).
3. Place a container beneath the gascolator (ULS) or fuel drain assy. (iS) with sufficient capacity for the fuel in the fuel tank.

■ ***WARNING: EXPECT SOME FUEL DRAINAGE TO OCCUR AS THE DRAIN VALVE IS REMOVED. USE PROTECTIVE GLOVES AND HAVE SHOP RAGS CLOSE BY.***

4. Remove the CAV-110 drain valve from the bottom of the gascolator (ULS) or line the area around the drain with absorbent towels, then remove the CAV-160 fuel drain assembly (iS).
5. Install the hose barb (with hose attached) in the opening where the fuel drain was removed.
6. Move the fuel selector control to the 'ON' position (ULS) or turn on the maintenance valve (iS).
7. Remove the fuel cap from the fuel neck.

■ ***CAUTION: TURN OFF THE ELECTRIC FUEL PUMP IMMEDIATELY WHEN A CHANGE IN SOUND IS HEARD, (THE LOUDER / HIGHER FREQUENCY SOUND INDICATES THE FUEL PUMP IS NO LONGER PUMPING FUEL) DO NOT ALLOW THE FUEL PUMP TO OPERATE WITHOUT FUEL OR PERMANENT DAMAGE MAY OCCUR.***

8. **ULS Only** - Turn on the master switch and operate the ES 40135 Electric Fuel Pump until the fuel pump stops pumping fuel.
9. **iS Only** – Allow the fuel to drain via gravity.
10. Once fuel is fully drained, move the fuel selector control to the 'OFF' position.
11. Reinstall the fuel filler cap in the fuel neck.

12. To aid in clearing the fuel lines use low pressure (5-10 PSI max) air applied to the open end of the fuel drain hose that is connected to the bottom of the gascolator or fuel drain assy. This will evacuate the majority of the fuel held within the system, and help prevent fuel loss if system components are being removed.
13. Repeat Steps 6-9 to remove any remaining fuel from the tank.
14. Remove the fuel drain hose and hose barb, and reinstall the drain valve in the bottom of the gascolator (ULS) or fuel drain assy. (iS) using pipe thread sealant.

FUEL TANK REMOVAL

Expendable	None
Replaceable	None
Service Rating	Line
Minimum Certification	LSA-RM or A&P
Additional References	KAI

1. Drain the fuel system. (13-17)
2. Loosen the two clamps and remove the fuel filler hose from the fuel tank and filler neck assy.
3. Remove the screws (4) and the center access cover plate on the bottom of the fuselage.
4. Disconnect the fuel sending unit wire screw (1) from the fuel sending unit.
5. Disconnect the two fuel lines from the bottom of the tank.
6. Remove the bolt (1), washers (2), and nut (1) from each upper outboard fuel tank attach bracket.
7. Remove the screw and washer from the lower aft fuel tank attach bracket.
8. Remove the fuel tank.

INSTALLATION

1. Installation procedure is reverse of the removal procedure.

FUEL SYSTEM COMPONENT REMOVAL

▲WARNING: BEFORE PERFORMING ANY MAINTENANCE OR REPAIRS TURN THE MASTER SWITCH 'OFF' AND DISCONNECT THE NEGATIVE (-) BATTERY CABLE FROM THE BATTERY.

Expendable	None
Replaceable	None
Service Rating	Line
Minimum Certification	LSA-RM or A&P
Additional References	KAI

1. Isolate the component from fuel flow with either the fuel shutoff valve or by draining the fuel tank/system (13-17).
2. Label, and then disconnect the electrical connections attached to the component, if applicable.
3. Disconnect the fuel line(s) attached to the component, if applicable.
4. Remove the attaching hardware and component.

INSTALLATION

1. Installation procedure is reverse of the removal procedure.

SERVICE SCHEDULE PROCEDURES

▲ WARNING: ALWAYS HAVE AN APPROPRIATE FIRE EXTINGUISHER READILY AVAILABLE.

GASCOLATOR CLEANING/INSPECTION (ULS)

Tools	Safety wire pliers Fuel catch container Protective Gloves
Expendable	Safety wire
Replaceable	Gas-5 Screen Gas-5 O-ring gasket
Service Rating	Line
Minimum Certification	Owner **and** SPC, LSA-RM or A&P
Additional References	KAI

1. Remove the access cover plate located below the Gascolator
2. Move the fuel valve to the OFF position.

■ WARNING: EXPECT SOME FUEL DRAINAGE TO OCCUR AS THE GASCOLATOR BOWL IS REMOVED. USE PROTECTIVE GLOVES AND HAVE SHOP RAGS CLOSE BY.

3. Remove the fuel quick-drain to drain the existing fuel from the gascolator bowl.
5. Remove the safety wire and screws (4) from around the gascolator bowl. Remove the collar and the gascolator bowl. **(Note: Have a container available to catch any spillage of fuel that still remains in the gascolator and fuel lines).**
6. Use a small pointed tool to lift the edge of the filter screen and remove it from the gascolator housing for cleaning.

INSTALLATION:

1. Installation procedure is reverse of the removal procedure. Use thread sealant on the threads when re-installing the quick-drain valve.

COARSE FUEL TANK SCREEN REMOVAL

Expendable	pipe thread sealant
Replaceable	None
Service Rating	Line
Minimum Certification	LSA-RM or A&P
Additional References	KAI

1. Drain the Fuel System. (13-17)
2. Remove the screws (4) and center access cover plate from the fuselage bottom skin. (3-4)
3. Disconnect the fuel line (aft most fitting) from the fuel strainer on the bottom of the tank.
4. Unthread the fuel strainer from the fuel tank.
5. Clean the screen and inspect same for breakage or separation from fitting.

Installation:

1. Installation procedure is reverse of the removal procedure. Apply thread sealant paste to fuel strainer pipe threads before installation.

FUEL PRESSURE/RETURN ASSEMBLY REPLACEMENT (ULS)

Special Tools	torque wrench(in-lb) Protective Gloves
Expendable	Plastic tie-wrap 8in
Replaceable	VA-216 Fuel Pressure/Return Assembly
Service Rating	Line
Minimum Certification	LSA-RM with Rotax Service certification of A&P with Rotax Service Certification
Additional References	KAI

NOTE: WHEN LOOSENING OR TIGHTENING THE BANJO BOLT SUPPORT THE CLAMP BLOCK (FUEL MANIFOLD) APPROPRIATELY.

■ WARNING: EXPECT SOME FUEL DRAINAGE TO OCCUR AS THE HOSE CONNECTIONS ARE REMOVED. USE PROTECTIVE GLOVES AND HAVE SHOP RAGS CLOSE BY.

1. Drain fuel system forward of fuel valve. (13-4)
2. Disconnect both ends of Fuel Pressure/Return Assembly.
3. Remove banjo bolt M8X1X17 from top of clamp block.
4. Cut tie-wraps and remove Fuel Return Assembly.

Installation:

1. Installation of new hose assembly is reverse of removal procedure. Rotax specifies that new copper crush washers be used.
2. Torque banjo bolt M8X1X17 to 90 in-lbs.

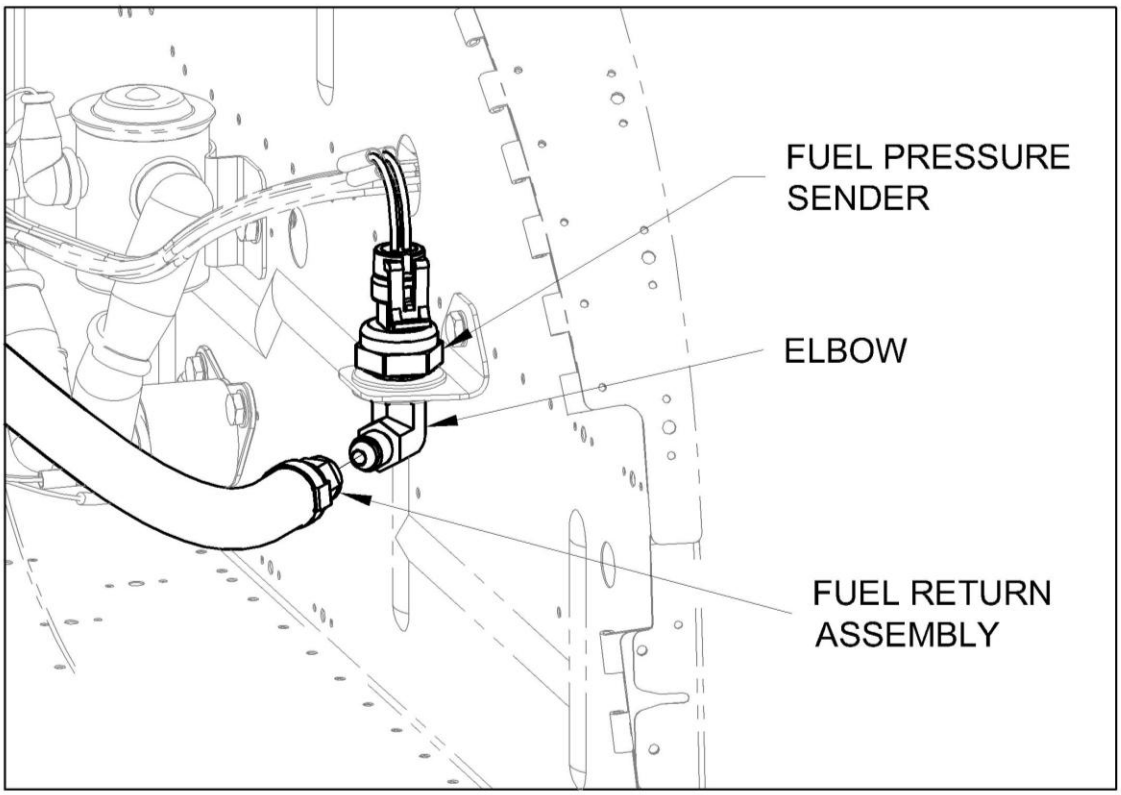

Figure 31: Fuel Pressure Hose Flush

FUEL PRESSURE HOSE FLUSH (ULS) (LEFT SIDE OF VA-216 HOSE ASSEMBLY)

Expendable	NA
Replaceable	NA
Service Rating	Line
Minimum Certification	LSA-RM with Rotax Service certification or A&P with Rotax Service certification
Additional References	KAI

1. Place towels beneath the Fuel Pressure Sender.

■ WARNING: EXPECT SOME FUEL DRAINAGE TO OCCUR AS THE HOSE CONNECTION IS REMOVED. USE PROTECTIVE GLOVES AND HAVE SHOP RAGS CLOSE BY.

2. Loosen VA-216 Fuel Return Assembly hose coupling while supporting elbow with second wrench.
3. Place container beneath hose and remove hose from fitting.
4. With end of hose inside container, flush hose by turning on fuel boost pump for two seconds.
5. Reinstall hose to elbow.

FUEL RETURN HOSE FLOW CHECK (ULS) (RIGHT SIDE OF VA-216 HOSE ASSEMBLY)

Special Tools	Protective Gloves
Expendable	NA
Replaceable	NA
Service Rating	Line
Minimum Certification	LSA-RM with Rotax Service certification or A&P with Rotax Service certification
Additional References	KAI

1. Place towels beside the Fuel Return hose connection at the firewall.

■ WARNING: EXPECT SOME FUEL DRAINAGE TO OCCUR AS THE FUEL HOSE IS REMOVED. USE PROTECTIVE GLOVES AND HAVE SHOP RAGS CLOSE BY.

2. Remove the VA-216 Fuel Return Assembly hose coupling from the firewall fitting and quickly move it to a higher position to prevent fuel from leaking.
3. Place the hose end in a graduated container and operate the electric fuel pump for one minute. Confirm that the captured fuel measures at least 3 oz. If it does not, remove the hose assembly (13-20) and clear any blockages at the restrictor orifice located within the dual barbed banjo fitting, and then reinstall the hose assembly, and retest.
4. Reinstall the hose to the firewall fitting.

FUEL DRAIN HOSE REPLACEMENT (ULS)

Expendable	Tie wraps (2)
Replaceable	Fuel interconnect and drain hoses
Service Rating	Line
Minimum Certification	LSA-RM with Rotax Service certification or A&P with Rotax Service certification
Additional References	KAI

Removal

1. Cut the tie wraps attaching the drain hose to the gascolator-to-fuel-pump hose.
2. Loosen two hose clamps on the interconnect hose and one clamp on the drain hose and slide the clamps onto the aluminum drain tube.
3. Remove the hoses.

Installation

1. Install new hoses onto the fuel pump drain fitting and the drain tube.
2. Slide hose clamps back into position over the hoses and tighten.
3. Secure the drain hose to the gascolator-to-fuel-pump hose using tie wraps.

FUEL PRE-FILTER CLEANING/INSPECTION (iS)

Special Tools	Protective Gloves Safety Wire
Expendable	NA
Replaceable	NA
Service Rating	Line
Minimum Certification	LSA-RM or A&P
Additional References	KAI

1. Drain system (13-7).
2. Slightly loosen the fitting at the upper end of the prefilter to fuel pump line and wait for fuel to stop draining from the fuel drain assembly.
3. Place towels beneath the fuel prefilter.

■ WARNING: EXPECT SOME FUEL DRAINAGE TO OCCUR AS THE LINE CONNECTIONS ARE REMOVED. USE PROTECTIVE GLOVES AND HAVE SHOP RAGS CLOSE BY.

4. Remove the lines from both ends of the prefilter
5. Loosen the clamp retaining the filter to the mounting bracket, and remove the filter.
6. Thread the end of the filter out of the filter body.
7. Inspect / clean the filter and interior of filter body.

8. Reassemble the filter.
9. Reinstall Pre-filter in reverse order of removal.
10. Double check that all lines are properly tightened and then move the fuel selector control to the 'ON' position and check for leaks at all fittings. Re-install safety wire on the maintenance valve.

FINE FUEL FILTER REPLACEMENT (iS)

• NOTE: The fuel filter should be replaced in the time interval prescribed in the Service Schedule Checklist or any time the fuel pressure is operating above the normal operating range.

Special Tools	Protective Gloves Pipe thread sealant
Expendable	NA
Replaceable	NA
Service Rating	Line
Minimum Certification	LSA-RM or A&P
Additional References	KAI

1. Move the maintenance valve to the 'OFF' position.
2. Place towels beneath the Main Fuel Filter.

■ WARNING: EXPECT SOME FUEL DRAINAGE TO OCCUR AS THE LINE CONNECTIONS ARE REMOVED. USE PROTECTIVE GLOVES AND HAVE SHOP RAGS CLOSE BY.

■ CAUTION: TURN OFF THE ELECTRIC FUEL PUMP IMMEDIATELY WHEN A CHANGE IN SOUND IS HEARD, (THE LOUDER / HIGHER FREQUENCY SOUND INDICATES THE FUEL PUMP IS NO LONGER PUMPING FUEL) DO NOT ALLOW THE FUEL PUMP TO OPERATE WITHOUT FUEL OR PERMANENT DAMAGE MAY OCCUR.

3. Run each fuel pump momentarily to clear as much of the fuel from the pump manifold as possible.
   Do not continue running the pumps after the sound pitch changes. (Indicating they have run dry)
4. Disconnect the F-12127T Fuel Line from the outboard filter fitting located at the inlet side of the Fuel Filter, and if available seal the fitting with a cap to prevent fuel spillage.
5. Loosen the FLF-00020 banjo bolt, making sure to catch fuel spillage with a towel wrapped around the outlet side of the filter.
6. Fully remove the banjo bolt (1) and FLF-00024 seal washers (3).

7. Loosen the clamp retaining the main filter to the mounting bracket and remove from the tailcone
8. At reinstallation the FLF-00022 and FLF-00024 washers may be reused if the rubber seal is undamaged. Reinstall the main fuel filter assembly and related lines in the reverse order as removed. Pay particular attention to proper positioning/centering of the seal washers on the fittings.
9. Double check that all lines are properly tightened and then move the maintenance valve to the 'ON' position, activate fuel pump 1 and check for leaks at all fittings.

LONG TERM STORAGE

1. Follow ROTAX engine preservation and storage. See ROTAX Operator's manual.
2. Drain the fuel system unless filled with 100LL. See "Draining The Fuel System"
3. If 100LL is not used, drain the carburetor bowls (if installed). See Draining the Carburetor Bowls.

DRAINING THE CARBURETOR BOWLS

Special Tools	Protective Gloves
Expendable	NA
Replaceable	Fuel bowl gasket
Service Rating	Line
Minimum Certification	LSA-RM or A&P
Additional References	KAI

1. Loosen the hose clamp on the rubber boot attaching the carburetor to the intake manifold.
2. Disconnect the spring and pull the carburetor aft out of the boot.

■ WARNING: EXPECT SOME FUEL DRAINAGE TO OCCUR AS THE BOWLS ARE REMOVED. USE PROTECTIVE GLOVES AND HAVE SHOP RAGS CLOSE BY.

3. Slide the wire bail aft, remove the bowl, and drain the fuel.
4. Inspect gasket for integrity and position prior to installation.
5. Bowl installation is reverse of removal.

THIS PAGE INTENTIONALLY LEFT BLANK

Chapter 14 - **EXHAUST SYSTEM**

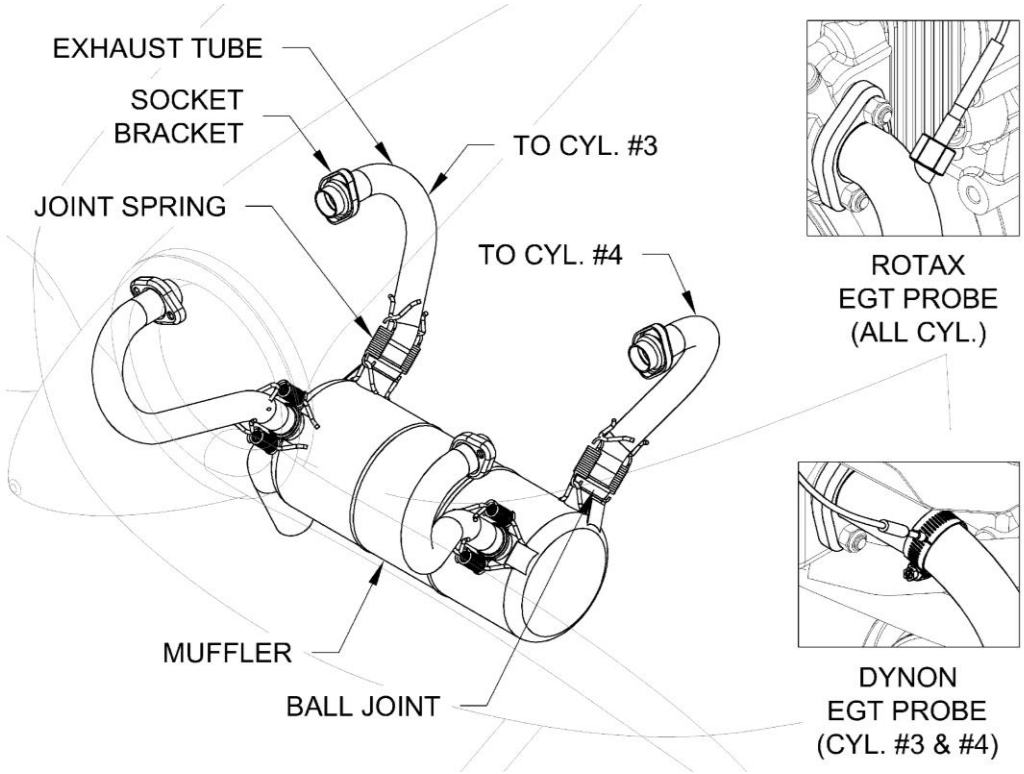

OVERVIEW 14-2
Components 14-2
SERVICE 14-2
Supplies 14-2
Special Tools 14-2
Expendable 14-2
Replaceable 14-2
General 14-3
Exhaust system removal 14-3
Installation 14-3
Service Schedule Procedures 14-4
Ball joint lubrication 14-4
Exhaust flat spring replacement 14-4

OVERVIEW

The primary purpose of the exhaust system is to direct engine combustion gasses and heat away from the aircraft, components and occupants. The purpose of the muffler is to reduce engine noise and allow attachment of a heat muff for heating cabin air.

> • ***NOTE: THIS MAINTENANCE MANUAL IS INTENDED TO BE USED IN CONJUNCTION WITH THE RV-12iS KIT ASSEMBLY INSTRUCTIONS (KAI) WHEN COMPLETING MAINTENANCE OR REPAIR PROCESSES.***

COMPONENTS

Quantity	Part or Assembly Name	Part Number or Reference
1 each (ULS)	Cylinder #(x) Exhaust	(1) EX-00026-1 (2) EX-00027-2 (3) EX-00028 (4) EX-00029
1 each (iS)	Cylinder #(x) Exhaust	(1) EX-00021-1 (2) EX-00022-2 (3) EX-00023 (4) EX-00024
1	Muffler Assembly	EX-00030
8	Joint spring	938 795
8	Exhaust M8-WS12 Lock Nut	842 950
2	Exhaust Flat Spring	EX-00045
4	Hose Clamp	HW-00017

SUPPLIES

SPECIAL TOOLS	• **LOCKING PLIERS**
EXPENDABLE	**REPLACEABLE**
• Anti-seize compound, high temp • Exhaust M8-WS12 Lock Nuts • RTV, high temp • Safety wire	• See component list above except M8 Nuts.

GENERAL

EXHAUST SYSTEM REMOVAL/INSTALLATION

▲ *WARNING: ALLOW THE EXHAUST COMPONENTS TO COOL BEFORE PERFORMING INSPECTION OR SERVICE.*

Expendable	Anti-seize compound, High Temp. RTV, High Temp. Safety Wire
Replaceable	Joint spring M8-12WS Nuts
Service Rating	Line
Minimum Certification	LSA-RM or A&P
Additional References	KAI

1. Remove the engine cowling. (12-4)
2. Remove the EGT sensor probe from any pipe equipped – ULS (2), iS (4)
3. Remove the two upper SCAT hoses from the heat muff outlets.

- ***NOTE: TO AVOID NICKING THE EXHAUST ATTACH SPRINGS, CLAMP A SHORT LOOP OF SAFETY WIRE IN LOCKING PLIERS. HOOK THE LOOP ONTO THE SPRING AND THEN PULL TO REMOVE THE SPRING.***

4. Remove the muffler attachment springs (8) and muffler.
5. Remove the two nuts and the exhaust tube from each cylinder exhaust port.

INSTALLATION

1. Lubricate the ball and slip joints. (14-4)
2. Installation procedure is reverse of the removal procedure.
3. Verify that each spring has an RTV stripe on each side and apply an RTV blob to each spring end.

SERVICE SCHEDULE PROCEDURES

BALL & SLIP JOINT LUBRICATION

▲ WARNING: ALLOW THE EXHAUST COMPONENTS TO COOL BEFORE PERFORMING INSPECTION OR SERVICE.

Required tools	Locking pliers
Required expendables	Anti-seize compound
Replaceable	None
Service rating	Line
Minimum Certification	LSA-RM or A&P
Additional Reference	KAI

1. Remove the two SCAT hoses from the upper outlets on the heat muff.

- ***NOTE: TO AVOID NICKING THE EXHAUST ATTACH SPRINGS, CLAMP A SHORT LOOP OF SAFETY WIRE IN LOCKING PLIERS. HOOK THE LOOP ONTO THE SPRING AND THEN PULL TO REMOVE THE SPRING.***

2. Remove the muffler attachment springs (8) and muffler.
3. Apply a generous amount of anti-seize compound to the exhaust tube where it meets the muffler socket.
4. Apply a light coat of anti-seize compound to the Cylinder #1 Exhaust slip joints.
5. Reinstall the muffler in reverse order of removal.
6. Verify that each spring has an RTV stripe on each side and apply an RTV blob to each spring end.

EXHAUST FLAT SPRING REPLACEMENT

Required tools	Flat-head Screwdriver
Required expendables	None
Replaceable	Exhaust flat springs Hose clamps
Service rating	Line
Minimum Certification	LSA-RM or A&P
Additional Reference	KAI

1. Remove the hose clamps and exhaust flat springs from the Cylinder #1 Exhaust slip joints.
2. Install new exhaust flat springs and hose clamps to the Cylinder #1 Exhaust slip joints.
3. Verify that the upper exhaust flat spring and hose clamps do not interfere with the cowling after installation.

Chapter 15 - **PAINTING AND COATINGS**

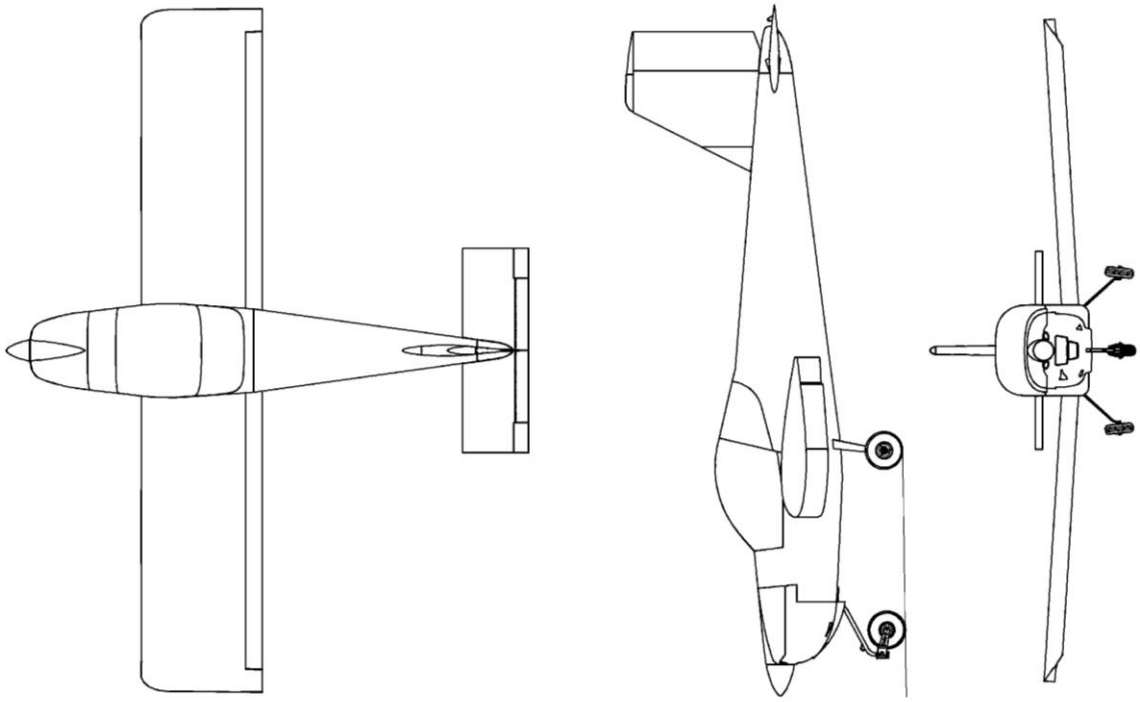

OVERVIEW 15-2
SERVICE 15-3
Supplies 15-3
Tools 15-3
Expendable 15-3
Replaceable 15-3
Service Schedule Procedures 15-3
Powder coat repair 15-3
Primer repair 15-4
Decorative paint repair 15-5

OVERVIEW

● *NOTE: REFER TO KAI – SECTION 4 AND 5 FOR ADDITIONAL INFORMATION.*

The aluminum skins used on the RV-12iS aircraft are all 2024-T3 alloy. They are "Alclad", meaning both sides of the sheet are coated with pure aluminum during manufacture. The thickness of the Alclad layer on aluminum sheet 1/16 inch thick or less is 5% of the sheet thickness. Alclad on aluminum sheet greater than 1/16 inch thick is 2.5% of the sheet thickness.

All non-Alclad aluminum parts such as 6061-T6 must be primed for corrosion protection. Aluminum tubing (other than fluid lines) must be primed on both the interior and exterior surfaces.

Aluminum bar, angle and tube used in the RV-12iS are not Alclad and must be primed to ensure corrosion resistance. Zinc Chromate has been the traditional primer used on aircraft aluminum. With proper surface cleaning this is still a good choice. There are however many superior primers now available. Most of these are two part, catalytic curing primers. Generally speaking it's preferable to replace a coated part with a coated part.

Following is a partial list of suitable primers:

- *DUPONT VERI-PRIME (PRIMER #615 and CONVERTER #616S)*
- *DITZLER DP-40/50 EPOXY PRIMER*
- *TEMPO brand Chromate in a spray can*
- *PRATT & LAMBERT Vinyl Zinc Chromate, EX-ER-7 and T-ER-4 Reducer*
- *SHERWIN WILLIAMS WASH PRIMER #P60G2 and Catalyst Reducer #R7K44*
- *MARHYDE self-etching primer, available in a spray can as well as quarts*

Decorative paint on the structure of the aircraft can be touched-up by the sport pilot certified owner or a certified repairman with 'maintenance' rating. Control surfaces can only be repainted by an LSA repairman with a 'maintenance' rating or an A&P.

Part replacement must be consistent with the original KAI from Van's Aircraft. Priming factory Alclad replacement parts remains at the repairman's discretion. Non-Alclad parts must be primed per the KAI. Any parts that require replacement due to corrosion warrant additional corrosion protection on the replacement part. When in doubt, prime the part.

SERVICE

▲ ***WARNING: PAINT OR SOLVENT MUST USED IN ACCORDANCE WITH THE MANUFACTURERS INSTRUCTIONS.***
▲ ***WARNING: DO NOT USE ANY TYPE OF BODY FILLER ON THE AIRCRAFT.***
▲ ***WARNING: DO NOT DAMAGE ANY RIVET HEADS WHEN PREPARING A SURFACE FOR TOUCH-UP PAINT.***
■ ***CAUTION: EXPOSED STEEL MUST BE CLEANED AND COATED WITH PRIMER OR POWDER COAT TOUCH-UP PAINT.***
■ ***CAUTION: ANY SCRATCH THAT MAY HAVE PENETRATED THE ALCLAD COATING MUST BE CLEANED AND PRIMED PROPERLY.***

SUPPLIES

SPECIAL TOOLS	EXPENDABLE
♦ Scotchbrite® type pad ♦ Sandpaper (various grades)	♦ Touch-up paint ♦ Primer ♦ Decorative touch-up paint
REPLACEABLE	
♦ None	

SERVICE SCHEDULE PROCEDURES

POWDER COAT REPAIR

▲ ***WARNING: IF CRACKS, PENETRATING RUST OR CORROSION ARE FOUND IN THE COATING SURFACE OF POWDER-COATED, PRIMED OR PAINTED PARTS, THE PART SHOULD BE CAREFULLY INSPECTED UNDER THE COATING FOR MATERIAL DAMAGE. IF IN DOUBT THE PART SHOULD BE REPLACED.***

Special Tools	Sandpaper Scotchbrite® type pad
Expendable	Primer Touch-up paint
Replaceable	None
Service Rating	Line
Minimum Certification	Total area 4 in² or less - Owner **and** SPC Total area greater than 4 in² - LSA-RM or A&P
Additional References	KAI

1. Use coarse grit sandpaper to remove the entire area of loose, stained or cracked coating. Discolored powder coat could conceal underlying rust damage and requires removal.
2. Gradually progress to finer grit sandpaper to achieve a smooth, gradual taper to undamaged coating.
3. Clean and dry the entire prepared area.
4. Apply primer and touch-up paint to the entire prepared area.

PRIMER REPAIR

● ***NOTE:* WHEN PRIMING A REMOVABLE PART BETTER RESULTS CAN BE ACHIEVED BY REMOVING THE PART.**

Special Tools	Scotchbrite® type pad Sandpaper
Expendable	Primer
Replaceable	None
Service Rating	Line
Minimum Certification	**Static structure:** Total area 56 in² or less - Owner **and** SPC Total area greater than 56 in² - LSA-RM or A&P **Control surface:** Total area 10 in² or less - Owner **and** SPC Total area greater than 10 in² - LSA-RM or A&P
Additional References	KAI

1. Remove any loose or damaged primer.
2. Use progressively finer grit sandpaper to achieve a smooth, gradual taper to undamaged primer.
3. Clean and dry the entire prepared area.
4. Apply primer to the entire prepared area.

DECORATIVE PAINT REPAIR

■ ***CAUTION:** ANY SCRATCH THAT HAS PENETRATED TO THE METAL MUST BE CLEANED AND PRIMED PRIOR TO APPLYING DECORATIVE PAINT.*

● ***NOTE:** WHEN PRIMING A REMOVABLE PART BETTER RESULTS CAN BE ACHIEVED BY REMOVING THE PART.*

Special Tools	Scotchbrite® type pad Sandpaper
Expendable	Applicable touch-up paint Primer
Replaceable	None
Service Rating	Line
Minimum Certification	**Static structure:** Total area 64 in² or less - Owner **and** SPC Total area greater than 64 in² - LSA-RM, or A&P **Control surface:** Total area 16 in² or less - Owner **and** SPC Total area greater than 16 in² - LSA-RM, or A&P
Additional References	KAI

1. Remove any loose or damaged paint.
2. Use progressively finer grit sandpaper to achieve a smooth, gradual taper to undamaged paint.
3. Clean and dry the entire prepared area.
4. Apply primer and touch-up paint to the entire prepared area.

THIS PAGE INTENTIONALLY LEFT BLANK

Chapter 16 - **TROUBLESHOOTING**

Symptom	**Possible Causes**	**Related Chapter**
Recurring blown fuse	♦ Short in circuit ♦ Overloaded circuit	8
Engine will turn over, fails to start	♦ Insufficient ignition source ♦ Insufficient fuel supply to engine ♦ Insufficient air supply to engine	8 13 12
Engine fails to turn over	♦ Insufficient battery power ♦ Blown 'Start' fuse ♦ Master or starter relay malfunction ♦ Starter malfunction	8
Heater air is cool	♦ Engine below operating temperature. ♦ Blockage in coolant system ♦ Air leak around heater box	12
Vent door stuck	♦ Damage to fuselage ♦ Damage to vent ♦ Over tightened vent hardware	3 5 KAI
Wing attach pin very difficult to insert or remove	♦ Insufficient lubrication ♦ Structural damage ♦ Wing not fully inserted ♦ Force applied to wing	5 3 5
Pulls to one side during taxiing (level surface)	♦ Low tire pressure ♦ Dragging brake ♦ Damage to landing gear ♦ Axle nut over tightened	1 7 KAI KAI
Difficult to turn while taxiing	♦ Brake malfunctioning ♦ Nose fork over tightened	7 KAI
Shudder after touch-down	♦ Nose fork under tightened ♦ Out of balance wheel assembly	5 5

Symptom	Possible Causes	Related Chapter
Low frequency vibration in flight	Out of balance nose wheel assembly	5
Vibration at idle	♦ Propeller installed incorrectly ♦ Propeller unbalanced ♦ Idle RPM too low ♦ Carb. sync. out of balance (ULS) ♦ Engine suspension loose	11 11 Rotax line maint. Rotax line maint. 3
Vibration at specific RPM	♦ Carburetor malfunction ♦ Ignition malfunction	12 Rotax line maint.
Excessive rattling	♦ Loose fasteners ♦ Loose baggage	3
Corrosion	♦ Loose electrical connection ♦ Exposure to contamination ♦ Failing protective coating ♦ Unlike metals exposed to moisture	8 3 15 15
Flight control resistance	♦ Insufficient lubrication ♦ Control surface hinge axis not aligned ♦ Failing control system components ♦ Improper control system adjustments	2 5-17 6 KAI
Erroneous engine status	♦ Malfunctioning sensor ♦ Loose connection ♦ Malfunctioning EMS	8 3 9
Abnormal engine noise	♦ Damaged or leaking exhaust system ♦ Open passage in firewall	14 3
Excessive fuel pressure (ULS)	♦ Blocked fuel return hose orifice	13
Excessive fuel pressure (iS)	♦ Restricted Fuel filter	13

BRP UTILITY AND DIAGNOSTIC SOFTWARE (BUDS)

A maintenance port is located beneath the instrument panel to the right of the center console to accommodate the BUDS ECU 9 pin d-sub. See Figure.

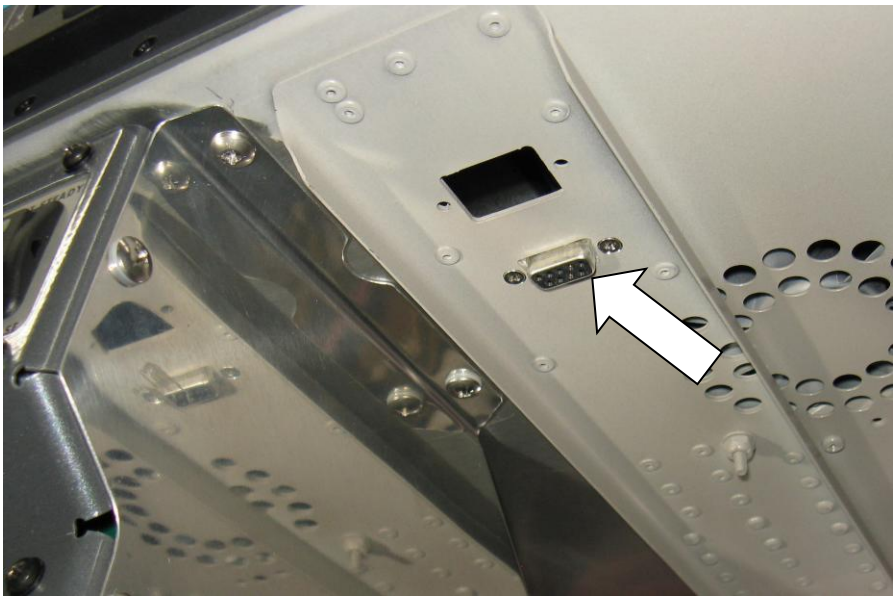

BUDS is a ROTAX product designed to read and extract data from the 912iS ECU (Engine Control Unit). The BUDS system utilizes BRP windows-based software, and a specific USB-to-CAN converter (dongle).

The converter, BUDS Set Level 2, P/N 864 022, is designed for trained and certified mechanics and allows the user to reset faults.

Owners of the aircraft do not have to purchase a BUDS system to view error codes. To view ROTAX 912iS fault information via EFIS scan the following QR code:

Or enter the URL:

THIS PAGE INTENTIONALLY LEFT BLANK

Chapter 17 - FEEDBACK & REPLACEMENT PARTS

FEEDBACK

To maintain the highest level of safety Van's Aircraft Inc. requests and the FAA requires notification of any safety of flight issue, service, or maintenance difficulty that could compromise airworthiness of the RV-12iS aircraft. **A feedback form is provided in the Supplement section of this manual.**

A valuable description will include:

- Specific flight condition if applicable.
- List of the parts identified as affected by the anomaly.
- Description of the apparent condition of the parts prior to the anomaly (de-burred, primed, modified, etc.)
- Statement as to whether the aircraft has remained within the operating limitations defined in the POH.
- Brief description of the type and frequency of aircraft use (may include; runway conditions, flying conditions, storage methods, etc.)

REPORTING METHODS

Mail to:
ATTN: RV-12iS Safety Alert
Van's Aircraft, Inc.
14401 Keil Road, NE
Aurora, OR 97002 USA

Fax to:
'RV-12iS Safety Alert' (on cover page)
503.678.6560
Hours: 24 hours per day

E-mail to:
'RV-12iS Safety Alert' (in subject line)
engineering@vansaircraft.com

REPLACEMENT PARTS

Van's Aircraft Inc. reserves the right to update, modify or discontinue any part without notice. Van's Aircraft Inc. is not liable for the use of any part or material by the owner that does not appear on the kit's part list. Use of any unauthorized part or material will be at the owner/operators own risk.

For replacement parts contact Van's Aircraft Inc. using the information found on page iv.

Part number and description may be obtained from the Kit Assembly Instructions. Whenever ordering replacement parts please provide the following information:

- Name
- S-LSA Serial or E-LSA Builder Number
- Day Phone
- Fax (if applicable)
- Email
- Ship to Address:
  - Address
  - City
  - State/Province
  - Zip/Postal Code
  - Country
- Part Number
- Description
- Quantity
- Payment method and corresponding account #, & exp. date (if applicable)

SUBSTITUTE PARTS

The following parts are approved for substitution. Either the original part or substitute part is acceptable for installation in the aircraft.

Oil System ***(Note: There was no 'original part' in this case.)***
FUMOTO F107N 12mm-1.75 Quick Oil Drain Plug ↔ CCA-2450 Valve and CCA-2474 Extension ↔ SAF-AIR M12175 Valve and RM12175 Extension.

Torx Drive Screw
AN526C832-R8 Phillips Truss SS X 1/2 in ↔ Fastenal 0175181 Torx, Pan Head, SS X 1/2 in (0175180, 3/8 in) NOTE: May be used in place of screws that hold all interior panels.

Rivets

AN470AD rivets may be substituted for specified LP4 rivets.

AN426AD4 rivets may be substituted for specified CS4 rivets

Cherry Max CR series rivets may be substituted for any AN470AD rivet or LP4 rivet.

CCR rivets and solid AN426AD3 rivets, used for attaching nutplates, may be used interchangeably. AN426AD3 rivets are preferred for strength wherever they can be accommodated.

THIS PAGE INTENTIONALLY LEFT BLANK

Chapter 18 - **SUPPLEMENT**

SERVICE SCHEDULE CHECKLIST.....18-3
INSPECTION CHECKLIST.....18-7
ELECTRICAL SYSTEM SCHEMATIC.....18-29
3 VIEW.....18-31
FEEDBACK FORM.....18-33

THIS PAGE INTENTIONALLY LEFT BLANK

SERVICE SCHEDULE CHECKLIST

What	Action	When	How	Service Date	Next Due	Initial
Aircraft	Inspection	Annual or 100 hours	3-1			
Aithre Shield 3.0 CO Detector	Replace	10 years	SL-00010			
AOA wing root connection	Lubricate and Test, as required	Every wing removal	5-26			
AST attach hinge	Lubricate	Annual or 100 hours	5-27			
Battery	Charge	As needed	8-12			
Brake fluid	Flush & replace	5 years	7-5			
Brake pedal components	Lubricate	2 years or 200 hours	7-4			
Brake shoe linings	Replace	As needed	7-6			
Cable end hardware	Lubricate	Annual or 100 hours	6-9			
Control system cable tension	Check	Annual	6-3			
Control system rod ends	Lubricate	Annual or 100 hours	6-8			
Coolant Hoses	Replace	5 years	12-11			
EFIS software	Check for updates	Annual or As needed	Dynon or Garmin user's manual			
ELT	Self Test	3 Months	See Mfr's Manual			
ELT	Inspection	12 Months	See Mfr's Manual			
ELT Remote Control Panel Battery - Alkaline	Replace	5 years	See Manufacturer's Manual			
ELT Remote Control Panel Battery - Lithium	Replace	10 years	See Manufacturer's Manual			
ELT Audio Alert Indicator Battery	Replace	10 years	See Manufacturer's Manual			
Engine coolant	Replace	5 years	Rotax maintenance manual			
Engine service procedures	Check & perform	100 hours	Rotax maintenance manual			
Exhaust ball joints	Lubricate	Annual or 100 hours	14-4			

Exhaust flat springs	Replace	300 hours	14-4			

THIS PAGE INTENTIONALLY LEFT BLANK

SERVICE SCHEDULE CHECKLIST(CONTINUED)

What	Action	When	How	Service Date	Next Due	Initial
Flaperon bearings	Lubricate	6 months or as needed	5-27			
Flaperon control connection	Lubricate	Each removal	5-26			
Fuel Drain Hose (ULS)	Replace	5 years or with fuel pump replacement	13-10			
Fuel Pre-Filter (iS)	Flush	After first 100 hours or Annual (dependent on applicable CAA requirements) or with any fuel pressure indications above normal range	13-12			
Fuel Fine Filter (iS)	Replace	After TSN/TSO of 100 hours, then every 200 hours.	13-14			
Fuel Pressure Hose (ULS)	Flush	Annual or 100 hours	13-9			
Fuel Return Hose (ULS)	Flow check	Annual or 100 hours	13-10			
Fuel Tank Finger Strainer	Clean & inspect	One time per year	13-8			
Gascolator (ULS)	Clean & inspect	Annual or 100 hours	13-7			
Landing gear attach hardware	Torque	Annual or 200 hours	3-13			
Manifold Pressure Hose	Replace	10 years or eng. ovhl.	12-11			
Nose fork pivot	Lubricate	Annual or 100 hours	5-28			
Nose wheel bearings	Replace	As needed	5-27			
Oil Supply Hoses	Replace	On condition	12-10			
Propeller Hub Clamping Bolts	Torque	Annual or 100 hours	11-3			
Throttle Return Spring(s)	Verify Function	50 hours or after carburetor maintenance	12-14			
Wing Attach Locations	Lubricate	Each removal	5-23			
Wheel Balance	Balance	As needed	5-29			
Wheel bearings (Main)	Lubricate	2 years or as needed	5-25			

End of service schedule

THIS PAGE INTENTIONALLY LEFT BLANK

INSPECTION CHECKLIST

RV-12iS Aircraft Inspection	Reg. Number:
Airframe S/N:	Engine S/N:
Airframe TT:	Engine TT:
Inspection Date:	Inspector:

Check all that apply to inspector and inspection:
____ Owner ____ Operator ____ Pilot ____ A&P ____ LSA Repairman Inspection ____ LSA Repairman Maintenance
____ 100 hour ____ Annual ____ Extreme Conditions ____ After Hard Landing

Category:	**Check:**		
Documents		**Pass**	**Fail**
Certificate of Airworthiness	Onboard and Displayed		
Registration	Onboard and Accurate		
POH	Onboard		
Operating Limitations	Onboard		
Switch and control placards	Secure / Legible		
Identification Plate	Secure / Legible / Accurate		
"Light Sport" Placard ("Experimental" for E-LSA)	Displayed		
Weight & Balance / Equipment List	Onboard		
Service Schedule	Check Items due for service		
Systems & Controls Test	**Operations / Values**	**Pre-Inspection**	**Post-Inspection**
Engine Start Procedure	Effective / Complete		
Starter	Operational / Strong		
Engine Run-Up	Refer to Rotax Line Maintenance Manual		

Continued on next page

THIS PAGE INTENTIONALLY LEFT BLANK

		Pass	Fail
Left and Right Wing	Secure / Smooth operation of ailerons and flaps		
Brake System	Operation		
Fuel Level	Correct Indication		
Verify function of throttle return springs	Springs pull throttle to wide open with friction control off (see procedure page 12-10)		
Static RPM at full throttle	Operational / RPM _____		
Electrical System	Operational / Volts:_____ Amps:_____		
Cool Down & Shut Down	Effective / Normal		
Fluids (Oil, Hydraulic, Fuel, Coolant)	Leak / Level Check		
Stall warning	Tone present in headphones when stall sense switch is lifted		
Lighting	Check for proper operation of all exterior lights		

Continued on next page

THIS PAGE INTENTIONALLY LEFT BLANK

Notes:

Cockpit	**Check**		
Complete Pre-Inspection procedure	Step 1-5 (Page 3-3)	**Pass**	**Fail**
Aft Face of Firewall	Cracks / Deformation		
Rudder Pedal Assemblies	Cracks / Proper operation		
Brake Pedal Assemblies	Proper Operation / Leaks		
Control Sticks	Proper Operation		
Control system cables	Tension / Wear / Fraying		
Control system	Excess play / Friction / Proper operation		
Control Stops	Security / Deformation / Proper Adjustment		
Seat Belts	Security / Damage		
Seats	Cracks / Security		

Continued on next page

THIS PAGE INTENTIONALLY LEFT BLANK

Roll Bar, and Canopy Frame	Security / Cracks / Proper Latch Operation		
Control / Instrument Panels	Proper Placards Installed		
Control / Instrument Panels	Security / Connections		
Fuses	Security / Condition / Spares		
Air & Heat Vents	Operation / Security		
Engine Throttle Control Cable	Operation / Kinks / Interference		
Fuel selector Control ON/OFF	Kinks / Interference / Operation (Confirm full valve movement between ON and OFF position)		
Wiring Harness	Condition / Connections / Security		
System Lines (Fuel, Brake, Static)	Security / Routing / Condition / Fittings		
Fuel System Components	Security / Leaks		
Fuel Strainer / Gascolator [ULS only]	Clean/Secure		
Fuel Coarse Filter [iS only]	Clean/Secure		
Fuel Filter [iS only]	Replace as prescribed in Service Schedule Checklist		

Avionics	**Inspect per Manufacturer Manual**	**Pass**	**Fail**
Each Main Unit	Condition / Security		
Wiring & Conduit	Chafing / Routing / Security		
Connections	Corrosion / Security		
Antenna Mounts	Condition / Security		

Optional Equipment Throughout	**Inspect per Manufacturer Manual**	**Pass**	**Fail**

Continued on next page

THIS PAGE INTENTIONALLY LEFT BLANK

Emergency Locator Transmitter	**Comply with current FAR 91.207**	**Pass**	**Fail**
"G" Switch	Also refer to current CFR 91.207		
Calendar date	Also refer to current CFR 91.207		
Battery Condition	Also refer to current CFR 91.207		
Audio Alert Indicator Battery	See Manufacturer's Manual		
Remote Control Panel Ind. Battery	See Manufacturer's Manual		
Self Test	See Manufacturer's Manual		

Propeller	**Refer to Sensenich Manual**	**Pass**	**Fail**
Spinner / Back-plate	Cracks / Deformation		
Blades	Delamination / Cracks / Damage		
Hardware	Condition / Torque		
Hub	Fasteners / Security		
Gear Box	Leaks / Fasteners / Security		
Prop Track	Measure difference in blade track		

Continued on next page

THIS PAGE INTENTIONALLY LEFT BLANK

Engine	Refer to Rotax Manual	Pass	Fail
Engine and components	Comply with Rotax manufacturer inspection recommendations and procedures (Rotax Line Maintenance Manual)		

Firewall Forward	Check	Pass	Fail
Overall insp. of Engine Compartment	Leakage / Corrosion / Wear		
Fwd. Face of Firewall	Deformation / Cracks / Unsealed holes		
Engine Mount	Cracks / Signs of Fatigue / Corrosion		
Vibration Isolators	Cracks / Deterioration		
Engine Mount & Isolator Hardware	Condition / Torque		
Wiring Harness	Condition / Connections / Continuity		
Battery	Condition / Corrosion / Security / Charge		
Cabin Heat valves and controls	Security / Condition / Operation		
Throttle Control Cable(s)	Operation / Condition / Connection		
Choke Control [ULS only]	Operation / Condition / Connection		
Air Filter(s)	Clean / Secure		
Heat Exchangers (oil & coolant)	Leaks / Condition / Security		
Evaluate life limited parts	Check for last replacement		
System Lines (Fuel, Pitot)	Security / Routing / Condition		
Fuel, Oil, and Coolant hoses and lines	Condition / Security		
Heat Muff and Muffler	Deformation / Wear / Leakage		
Cowling	Condition / Fasteners / Attach Hinges		

Continued on next page

THIS PAGE INTENTIONALLY LEFT BLANK

Empennage	Check	Pass	Fail
Vertical Stabilizer Skins	Deformation / Cracks / Signs of Wear / Corrosion		
Vertical Stabilizer Skin Rivets	Missing / Deformed		
Vertical Stabilizer Fwd. Spar	Deformation / Cracks / Signs of Wear		
Vertical Stabilizer Rear Spar	Deformation / Cracks / Signs of Wear		
Vertical Stabilizer Fiberglass Fairing	Condition / Security		
Vertical Stabilizer to Rudder Interface	Signs of Wear / Contact		
Vertical Stabilizer Interior Structure	Deformation / Cracks / Signs of Wear / Corrosion		
Rudder Skin	Deformation / Cracks / Signs of Wear		
Rudder Skin Rivets	Missing / Deformed		
Rudder Spar and Hinge Brackets	Deformation / Cracks / Signs of Wear		
Rudder Fiberglass Fairing	Condition / Security		
Rudder Control Horn	Coating Damage / Cracks / Deformation / Missing Fasteners		
Rudder Control Cables	Swages / Fasteners		
Rudder Stops	Wear / Deformation		
Rudder	Confirm Freedom of Movement		
Stabilator Skins	Deformation / Cracks / Signs of Wear / Corrosion		
Stabilator Skin Rivets	Missing / Deformed		
Stabilator AST Attachment	Wear / Security / Safety Wire		
Stabilator Box Spar	Deformation / Cracks / Signs of Wear / Corrosion		
Stabilator Ribs	Deformation / Cracks / Signs of Wear / Corrosion		
Stabilator Control Horns	Coating Damage / Cracks / Deformation		
Stabilator C' Balance Arm & Brackets	Deformation / Cracks / Signs of Wear / Corrosion		
Stabilator Hinge Brackets	Deformation / Cracks / Signs of Wear / Corrosion		
Stabilator	Proper Movement		

Continued on next page

THIS PAGE INTENTIONALLY LEFT BLANK

Empennage (Continued)	Check	Pass	Fail
Anti-Servo Tab Skins	Deformation / Cracks / Signs of Wear / Corrosion		
Anti-Servo Tab Skin Rivets	Missing / Deformed		
Anti-Servo Tab Spar / Hinge	Deformation / Cracks / Signs of Wear		
Anti-Servo Tab Control Horn Attach.	Deformation / Cracks / Signs of Wear		
Pitch Trim Push/Pull Rod and Link	Damage / Signs of Wear / Play		
Pitch Trim Servo and Tray	Cracks / Deformation		
Pitch Trim Tray Hardware	Wear / Play		
Pitch Trim Servo Wiring	Connections / Condition		
Anti-Servo Tab Operation	Binding / Interference		

Landing Gear	Check	Pass	Fail
Main Gear Legs / Brackets	Security / Wear / Corrosion or Bubbled Paint		
Landing Gear Attach Hardware	Torque		
Gear Legs	Bubbled Paint / Corrosion / Straightness		
Brake Hydraulic Lines	Leaks / Security / Wear		
Wheel Bearings	Lubrication / Free Play (Refer to Matco manual)		
Brake Calipers	Condition / Play (Refer to Matco manual)		
Brake Shoes	Lining Limit (Refer to Matco manual)		
Brake Disks	Cracks / Deformation / Thickness (Refer to Matco manual)		
Wheels	Alignment / Cracks (Refer to Matco manual)		
Tires & Valve Stem	Wear / Cracks / Air Pressure		
Nose Gear and Fork	Travel / Security / Break-out Force / Internal* Cor.		

Continued on next page

THIS PAGE INTENTIONALLY LEFT BLANK

Fuselage	Check	Pass	Fail
Skins	Deformation / Cracks / Signs of Wear / Corrosion		
Footprint Area of Left & Right Wing	Signs of Wear / Cracks / Damaged Fasteners		
Bulkheads & Stringers	Deformation / Cracks / Signs of Wear / Corrosion		
Left & Right Static Ports	Clean / Clear / Secure		
Wing Electrical Connectors	Corrosion / Damage		
Flaperon Torque Tube	Corrosion / Cracks / Presence of Spacers		
Left & Right Boarding Step	Security / Cracks / Seal		

THIS PAGE INTENTIONALLY LEFT BLANK

Wings / Center Section	Check	Pass	Fail
Skins	Deformation / Cracks / Signs of Wear / Corrosion		
Ribs & Attach Angles	Deformation / Cracks / Signs of Wear / Corrosion		
Main, Fwd. & Aft Spars	Deformation / Cracks / Signs of Wear / Corrosion		
Flaperon	Deformation / Cracks / Signs of Wear / Corrosion		
Hinges	Smooth Operation / Play / Lubrication		
Electrical Connections	Corrosion / Damage		
Stall Warning	Secure / Connection / Condition		
Fuselage Pin Latching Mechanism	Test Operation and Warning Indication		
Wing Retention Pins & Bushings	Signs of Fatigue / Wear / Maximum I.D. 1.505 inch		
Center Section (Channel & Bulkheads)	Deformation / Cracks / Signs of Wear / Corrosion		
Rear Spar Doubler	Check for Gap		
AOA System Plumbing	Test for leaks (After reinstallation of wings, if required)		

Continued on next page

THIS PAGE INTENTIONALLY LEFT BLANK

Paperwork		**Completed**
Record Findings	Aircraft Log	
Record Inspection	Aircraft Log	
Record Maintenance	Aircraft Log	

Notes and explanation of discrepancies found:

End of inspection checklist

THIS PAGE INTENTIONALLY LEFT BLANK

Electrical System Diagrams

Refer to P. O. H. or the Downloads Section under the Support tab of Van's Aircraft's web site
www.vansaircraft.com

THIS PAGE INTENTIONALLY LEFT BLANK

3 VIEW

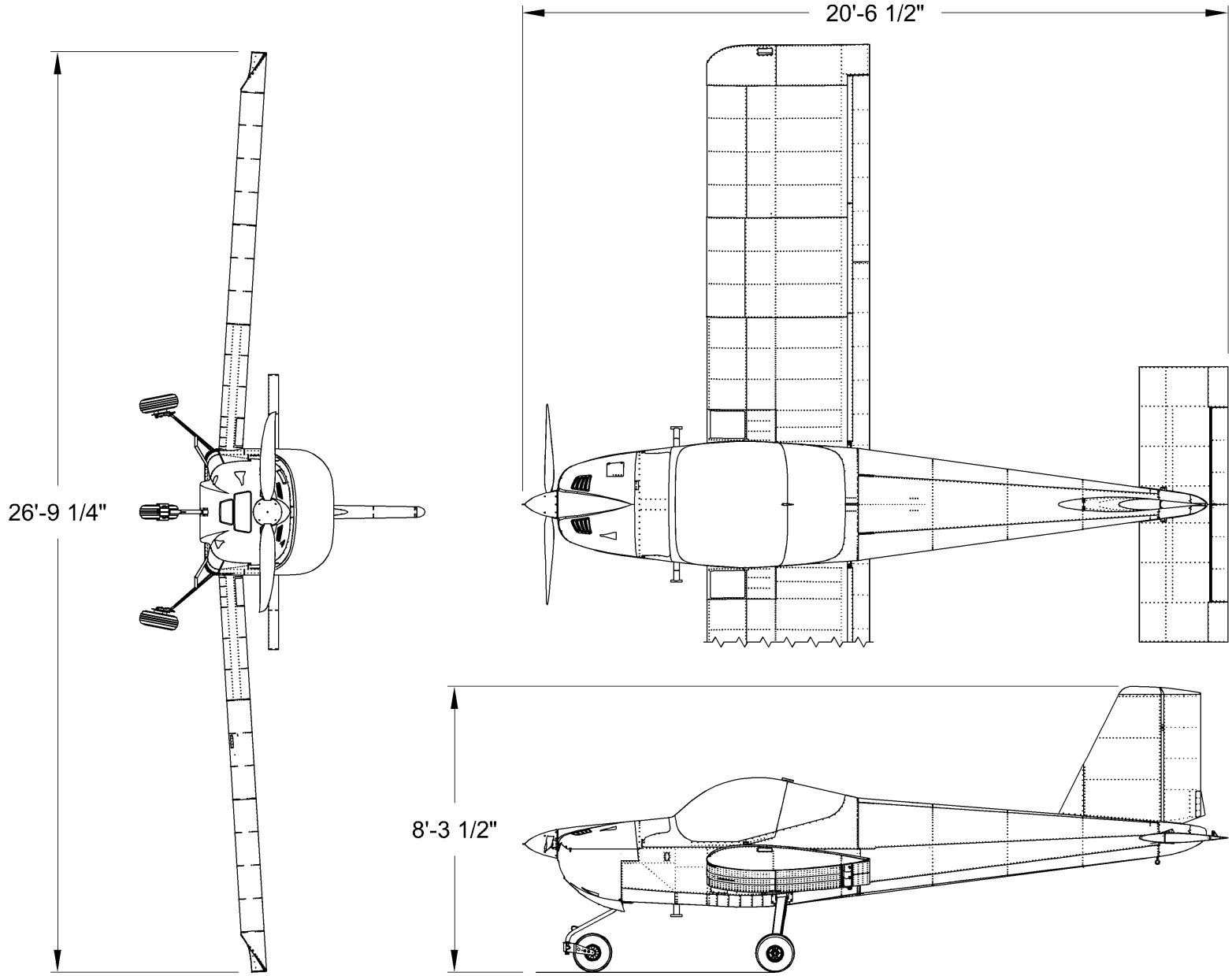

THIS PAGE INTENTIONALLY LEFT BLANK

Feedback Form

Owner:	Name	Phone:	Number	Aircraft:	Model
Contact:	Name	Phone:	Number	Total Time	Serial Number
Inspector:	Name	Phone:	Number	Engine:	Model
Inspection:	Date	Storage:	Inside/outside/etc	Total Time	Serial Number
Location:	City	State	Country		

Affected Parts:	

Problem Description:	

THIS PAGE INTENTIONALLY LEFT BLANK

- GLOSSARY

100-hr Inspection	Comparable to an annual condition inspection, except that the interval of inspection is 100 hrs of operation instead of 12 calendar months. This inspection applies to LSA used for commercial operations such as flight instruction or rental, or both.
A&P technician	Airframe and power plant technician as defined in the U.S. by 14 CFR Part 65 or equivalent certification in other countries.
Approved Owner	Some aircraft maintenance may be performed by an "Approved Owner" found competent by Van's Aircraft. Approval will be for a specific task, person(s) and aircraft.
F39	Refers to the FAA Advisory Circular 'Acceptable Methods, Techniques, and Practices – Aircraft Inspection and Repair.
Adverse conditions	Includes, but not limited to, conditions that could cause build up of foreign matter or contamination or removal of lubrications, such as; extreme weather, and dirty, sandy or salty conditions, thorough plane washing, etc.
Annual Condition Inspection	Detailed inspection performed once a year on an LSA in accordance with instructions provided in the maintenance manual supplied with the aircraft and F39 Appendix D. The purpose of the inspection is to identify any wear, corrosion, or damage before it compromises the safe operation and airworthiness of the aircraft.
Anti-Servo/Trim tab	**AST.** The anti-servo/trim tab has two functions. It provides movement resistance (control force feed back), and also serves as a trim control surface. The trim function is controlled with the pitch-trim servo.
AOA	Angle of Attack
As needed	At first sign of wear or abnormal operation and/or following exposure to adverse conditions.
CFR 14	Code of Federal Regulations Title 14 Aeronautics and Space also known as the FAR's.
Check	To verify the correctness of, as by comparison to inspect or test the condition, performance, safety, etc., of
Electronic Flight Information System	**EFIS.** Refers to the Dynon D-180, Dynon Skyview or Garmin G3X. The unit receives signals from multiple sensors on the airframe and engine and provides valuable engine and flight information based on the signals from the sensors.
Emergency Locating Transmitter	**ELT.** The electronic device unit that sends a distress signal when G loads exceed a critical value, or when activated manually.

Engine Management System	**EMS.** Refers to the Dynon D-180, Dynon Skyview or Garmin G3X. The portion of the EFIS unit that compiles and displays engine information.
Extreme conditions	Heavily contaminated air; dust, bugs, smoke, debris, ash, sand, etc. or adverse climatic conditions
Flaperon	A control surface that combines the aileron and flap functions into one component with both functions
Global Positioning System	**GPS.** A navigational system involving satellites and computers that can determine the latitude and longitude of a receiver on Earth.
Heavy Maintenance	Maintenance, inspection, repairs, or alteration that a manufacturer has designated to require special training, equipment, or facilities. Only a qualified person may perform heavy maintenance.
Kit Assembly Instructions	**KAI.** Refers to the original kit assembly instructions that are provided by the manufacturer to complete the assembly of a kit plane.
Line Maintenance	Any repair, maintenance, scheduled checks, servicing, inspections, or alterations not considered heavy maintenance by the manufacturer with instructions provided in the manufacturer's maintenance manual.
LSA Repairman Inspection	**LSA-RI.** U.S. FAA- certified repairman (light sport aircraft) with an inspection rating as defined by 14 CFR Part 65, authorized to perform the annual condition inspection on experimental light sport aircraft, or an equivalent rating issued by other civil aviation authorities. This requires a 16-hour course.
LSA Repairman Maintenance	**LSA-RM.** U.S. FAA-certified light sport aircraft technician with a maintenance rating as defined by 14 CFR Part 65. This certificate is authorization to perform line maintenance, inspections, and repairs on any LSA certified aircraft. The maintenance rating is category specific, I.E. Fixed wing, weight shift, lighter than air, etc.
Maintenance Manual(s)	Manual provided by an LSA manufacturer or supplier that specifies all maintenance, repairs, and alterations authorized by the manufacturer.
Major Repair, Alteration, or Maintenance	Only a qualified person may perform major repair, alteration, or maintenance tasks that are not included in this maintenance manual.
Manufacturer	Any entity engaged in the production of an LSA or component used on an LSA.
Minor Repair, Alteration, or Maintenance	Generally applies to repair, alteration, or maintenance covered by instructions provided in the maintenance manual(s) supplied to the consumer.

Overhaul	Maintenance, inspection, repair, or alterations that are only to be accomplished by the original manufacturer or a facility approved by the original manufacturer of the product.
Overhaul Facility	Facility specifically authorized by the aircraft or component manufacturer to overhaul the product originally produced by that manufacturer.
Pilot Operating Handbook	**POH.** The handbook provided with the aircraft that introduces the systems and features that are included in the RV-12iS. Includes air and ground operating procedures and defines performance and weight and balance information.
Special Light Sport Aircraft	**S-LSA.** Applies to the aircraft covered in this manual, provided it remains consistent with the manufacturers design specifications. Manufacturer design specifications are in accordance with ASTM standards; F2245 for airplanes.
Repair Facility or Repair Station	Facility specifically authorized by the aircraft or component manufacturer to repair the product originally produced by that manufacturer.
SPC	Sport Pilot Certified
Sport Pilot Certified	**SPC.** A person who holds a current Sport Pilot Certificate. A certified sport pilot may perform some line maintenance as described in FAR 43, appendix A, and approve for flight a private use S-LSA aircraft that they own or operate.
Stabilator	An aircraft control surface that combines the horizontal stabilizer and elevator into one fully movable component.

THIS PAGE INTENTIONALLY LEFT BLANK

Chapter 20 - **INDEX**

A

AOA (see Angle-Of-Attack)
Abbreviations 1-6
Air filter 12-3
  Oil.....1-11
  Inspection.....3-9
  Installation.....12-7
  Removal.....12-7
Angle-Of-Attack Sys. Press. Check.....3-16, 5-13
Anti-servo / trim tab 5-6, 5-7
  Inspection.....3-11
  Lubrication 5-27
Audio Input & Adjustment.....9-7
Avionics 9-1

B

Battery 8-5
  Charging 8-12
  Installation.....8-5
  Removal.....8-5
Bellcrank
  Bearing.....6-7
  Stops 3-5
Brake pedal
  Lubrication 7-4
Brake Shoe Lining
  Inspection.....*See* Matco Manual
  Replacement.....7-6
Brake System 7-1
  Drain 7-5
  Flush 7-5
  Substitute Parts.....17-2
BUDS .....*See* Troubleshooting

C

Canopy 5-3
  Cleaning.....1-11
  Installation.....5-14
  Inspection.....3-6
  Latch Block 5-3, 5-23
  Removal.....5-14
Capacities.....1-13
Carburetor Bowl, Draining.....13-15
Carburetor Synchronization 12-8
Center Section
  Inspection.....3-13
Cherry Rivet (see Rivet, Blind)
Cockpit

Inspection....3-5
Control cable....6-1
Replacement....6-6
Control Stops....3-5
Control system....6-1
Rod-End Lubrication....6-8
Coolant.... *See* Engine
Cowl Hinge.... 12-2, 12-11
Cowling
Installation....12-5
Removal....12-5

D

Decorative paint....15-5
Dynon....9-2, 9-3, 9-4, 18-3

E

Electrical System....8-1
Schematic.... see POH
Emergency Locator Transmitter
Inspection....3-7
Empennage....5-6
Inspection....3-10
Engine.... 1-12, 12-3
Firing Order....12-4
Inspection.... *See* Rotax Manual
Lubrication
Coolant....12-7
Oil.... 1-13, 12-6
Operating limits.... *See* Rotax Manual
Replacement....12-13
Specifications.... *See* Rotax Manual
Equipment List....1-21
Exhaust System....14-1
Installation....14-3
Lubrication....14-4
Removal....14-3

F

Feedback.... *See* Safety
Firewall Forward....12-1
Inspection....3-8
Flaperon....5-4
Lubrication....5-26
Fuel Filter....13-3
Replacement....13-14
Fuel Pre-filter....13-3
Clean/Inspect....13-13
Fuel Pressure Hose....13-3
Flush....13-11
Fuel Return Hose....13-3
Flow Check....13-12
Fuel System....13-1

Draining....13-4
Fuel Tank....13-7
Installation....13-8
Removal....13-8
Fuselage....5-2
Inspection....3-12
Lift and Support....1-16
Fuselage Pins....5-3
Fuses....8-6

G

Garmin....9-2, 9-4
Gascolator
Cleaning....13-9
Installation....13-10
Inspection....3-6
Removal....13-9

H

Harness, Shoulder....5-3
Inspection....3-6
Replacement....5-22
Heat....*See* Utilities
Hinge
Cowl....*See* Cowl Hinge
Hinge
Anti-Servo Tab....5-27
Flaperon....5-18
Rudder....5-19
Stabilator....5-20

I

Idle Speed Setting....12-9
Inner tube
Main....5-16
Nose....5-17
Inspection....3-1
Checklist....18-7

L

Landing Gear....5-8
Inspection....3-13
Lights....8-1
Lubricant....1-11
Lubrication....1-13

M

Main Landing Gear
Bearings....5-28
Inspection....3-13
Installation....5-22

Removal 5-22
Main Wheel and Tire
Inspection 3-13
Installation 5-15
Removal 5-15
Main Wheel Assembly 5-9
Master cylinder
Installation 7-4
Removal 7-3

N

Nose Gear Leg Fairing 5-10
Nose Landing Gear 5-8
Inspection 3-13
Lubrication 5-28
Removal 5-22
Nose Wheel and Tire
Bearings 5-27
Installation 5-16
Removal 5-16
Nose Wheel Assembly 5-9

O

Oil ..... *See* Engine
Overstress 3-1

P

Paint ..... *See* Painting and coating
Painting and Coating 15-1
Pitch-Trim Servo
Replacement 8-7
Pitot & Static 9-3
Powder coat
Repair 15-3
Primer 15-4
Propeller 11-1
Inspection 3-7, 11-3
Push/pull cable 10-3
Inspection 3-5, 3-9

R

Radio
Inspection 3-6
Rear Spar
Doubler Check 3-15
Doubler Replacement 5-24
Lubrication 5-26
Rivet
Blind, Cherry Max Alternative 4-2
Inspection 3-10
Rod end

Lubrication 6-8
Replacement.....6-7

Rudder Pedals
Installation.....6-8
Removal.....6-8
Rudder.....5-6
Inspection.....3-11
Hinge Replacement 5-19
RV-12iS
3-View 18-31
Summary.....1-1

S

Safety 1-4
Feedback 17-1
Feedback Form.....18-33
Sensenich..... *See* Propeller
Service Schedule 2-1
Table/ Checklist 18-3
Snap bushing 8-11
Software 9-6
Spark Plug.....12-4
Replacement.....12-5
Stabilator 5-6
Control cable pulley 6-3
Inspection.....3-11
Storage, Long Term 13-15
Stub Spar
Lubrication 5-26
Supplement 18-1
Substitute Parts 17-3

T

Tire Air Pressures 1-14
Torque 1-15
Troubleshooting 16-1

U

Units 1-7
Utility Systems.....10-1
Heat 10-2
Ventilation 10-3
Vent door 10-4

V

Ventilation..... *See* Utilities
Vertical Stabilizer 5-6
Inspection.....3-10
Volume ..... *See* Audio Input & Adjustment
Weight and Balance 1-18
Wheel Assembly Balancing.....5-29

Wheel Bearings
Main 5-28
Nose.....5-27
Wing Attach Location Lubrication 5-26
Fuselage Pins 5-26
Stub Spar and Rear Spar 5-26

ADDENDUM A-1: CH 6-CONTROL STICKS

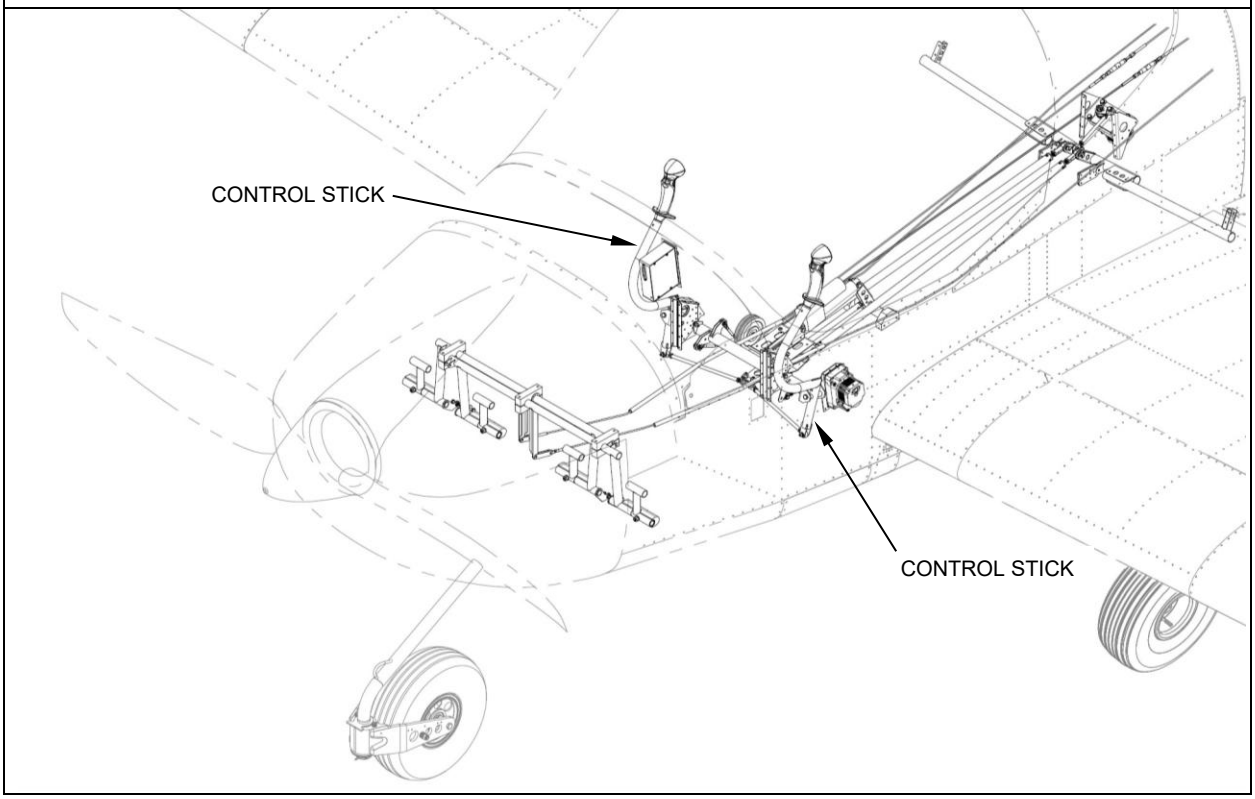

OVERVIEW

The flight control system enables the pilot to operate the control surfaces. Forward or aft movements of the control stick control the pitch. The pitch control linkage is a pair of cables, each routed around a pulley and attached to control horns on the stabilator. The pitch-trim is controlled by a linear actuator influencing the length of the anti-servo tab pushrod assembly, controlled by the pilot using a stick mounted switch or optionally, by the autopilot. Side-to-side movements of the control stick controls roll via push rods, a bell crank, and torque tubes. Rudder pedals control yaw via cables to the rudder. The flaps function of the flaperons is activated by a linear actuator controlled by a switch on the center console.
Refer to the Maintenance Manual and Kit Assembly Instructions (KAI) to identify the individual parts and part #'s of the control system.

- ***NOTE: This addendum is intended to be used in conjunction with the RV-12iS Maintenance Manual and Kit Assembly Instructions (KAI) when completing maintenance or repair processes.***

CS-12001 COMPONENTS

ITEM NO.	PART NO.	DESCRIPTION	QTY
1	WD-01212-2	Control Stick, Coated	2
2	GRIP CS-8	Grip, Standard Finish, Buttons: Left Red, Right Black	2
3		Screw and Locknut, 10-32	2

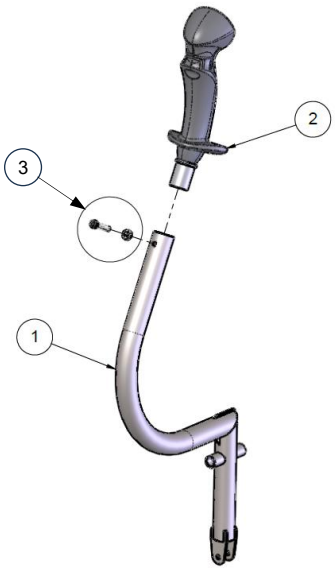

SERVICE

Annual lubrication will maximize the longevity of the control system. Refer to the service schedule checklist for the specific service frequency of the components.
See CH 18 Supplement for *service schedule checklist.*

SUPPLIES

SPECIAL TOOLS	CONSUMABLES
♦ Torque Wrench (in-lbs) ♦ Feeler Gauge	♦ Cotter Pins ♦ Spray Lubricant ♦ Torque Seal ♦ Loctite 'Blue'
	REPLACEABLE
	♦ Control Stick: CS-12001

GENERAL

CONTROL STICK REMOVAL & INSTALLATION

Consumable	Cotter pin Spray Lubricant Torque Seal Loctite 'Blue'
Replaceable	Control Stick
Service Rating	Line
Minimum Certification	LSA-RM, or A&P

REMOVAL

1. Remove the seat ramp cover and access panel.
2. Disconnect the 9-pin connector.
3. Remove the cotter pin, nut, bolt, and bushing from the control stick mounting point.
4. Remove the bolt, nut, and washer on the pushrod/mixer attachment.
5. Remove control stick and pushrod assembly.

INSTALLATION

1. Installation procedure is reverse of the removal procedure.
2. Apply lubricant sparingly to the control stick pivot bushings and pushrod bearings.
3. Allow lubricant to penetrate then wipe away excess.
4. Torque pushrod/mixer hardware to 85 in-lbs and apply torque seal.
5. Tighten control stick mounting point hardware to allow for a 0.010" gap between the torque tube flanges and the flight control stick mount. **NOTE:** Do not exceed 70 in-lbs.
6. Install a new cotter pin to the control stick mounting hardware.
7. Reconnect 9-pin connector.
8. Reinstall the seat ramp cover and access panel.
   Set the grip rotation by adjusting the 10-32 screw and locknut just in front of and below the grip. Use blue Loctite.

THIS PAGE INTENTIONALLY LEFT BLANK

ADDENDUM A-2: CH 7-PARKING BRAKE

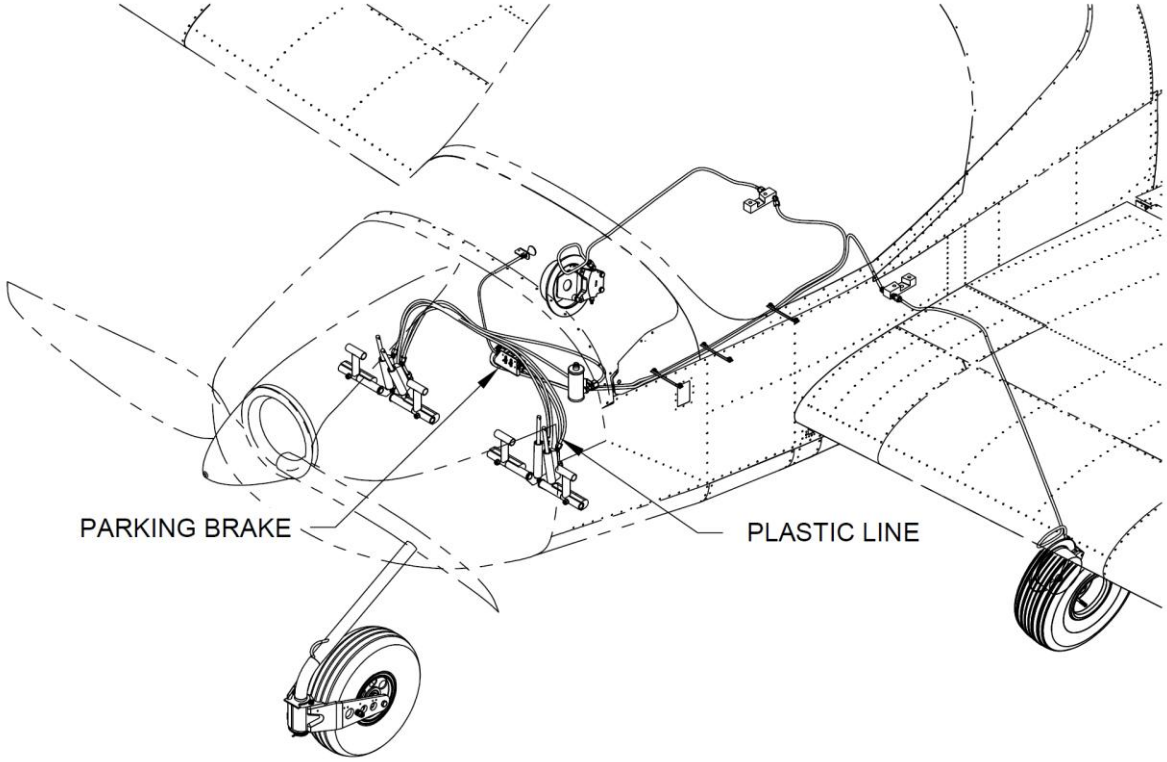

OVERVIEW

The brake system includes a parking brake to keep the aircraft stationary while parked, during boarding/deplaning, or during maintenance by locking hydraulic pressure to the main wheels, eliminating the need for wheel chocks for short-term stops. It acts as a safety mechanism to prevent uncommanded movement.

- ***NOTE: This addendum is intended to be used in conjunction with the RV-12iS maintenance manual and Kit Assembly Instructions (KAI) when completing maintenance or repair processes.***

COMPONENTS

ITEM NO.	PART NO.	DESCRIPTION	QTY
1	AN320-3	NUT, CASTLE, SHEAR	1
2	AN3-11A	BOLT	2
3	AN525-10R7	SCREW	1
4	CT A-740	PUSH-PULL CABLE	1
5	F 179CA-4-2	BRASS, 45° FITTING	2
6	F-12354	MAIN BRACKET	1
7	F-12355	KNOB BRACKET	1
8	FLF-68CA-4-2	REDUCER, AN8 FEMALE TO AN6 MALE	2
9	HW-00021	BOWDEN CABLE CLAMP	1
10	K1000-3	NUTPLATE	2
11	MS21051-L3	NUTPLATE	1
12	MS24665-132	COTTER PIN, 1/16" X 1/2"	1
13	NAS1149F0332P	WASHER	3
14	NAS1149F0363P	WASHER	2
15	BRAKE PARKING PV-2	PARKING BRAKE VALVE	1
16	VA-181-1	WIRE NUT	1

SUPPLIES

■ ***CAUTION: USE ONLY MIL SPEC MIL-PRF-83282 (PREFERRED) OR MIL-H-5606A HYDRAULIC FLUID! DO NOT USE AUTOMOTIVE BRAKE FLUID. DAMAGE TO O-RING SEALS MAY RESULT.***

SPECIAL TOOLS

- Brake bleeding fluid pump
- Container

CONSUMABLES

- Hydraulic fluid
- Cotter pin
- 'Blue' Locktite
- Torque Stripe

REPLACEABLE

- See components list.

SERVICE

Use of the proper hydraulic fluid is necessary for proper operation of the brake system. It is good practice to replace the hydraulic fluid every 5 years. If any indication of contamination is present, replace hydraulic fluid as soon as possible. Since the brakes on the RV-12iS are relied on for part of the airplanes steering control on the ground, any detected leaks should be repaired prior to further flight. Refer to the *service schedule checklist* for component service frequency.

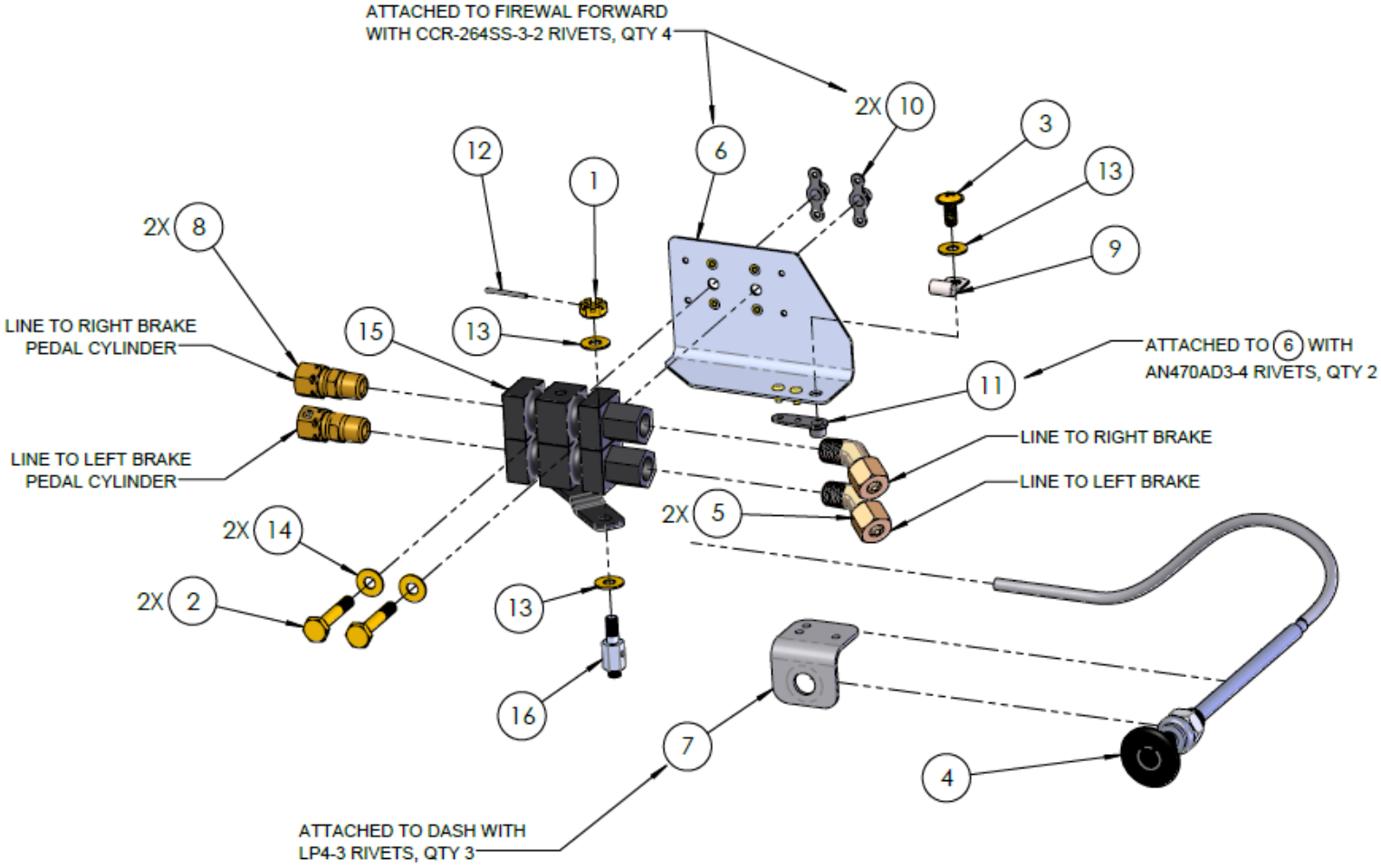

STEADY
PULSE

ADDENDUM A-3: CH 8-CANOPY LIGHT

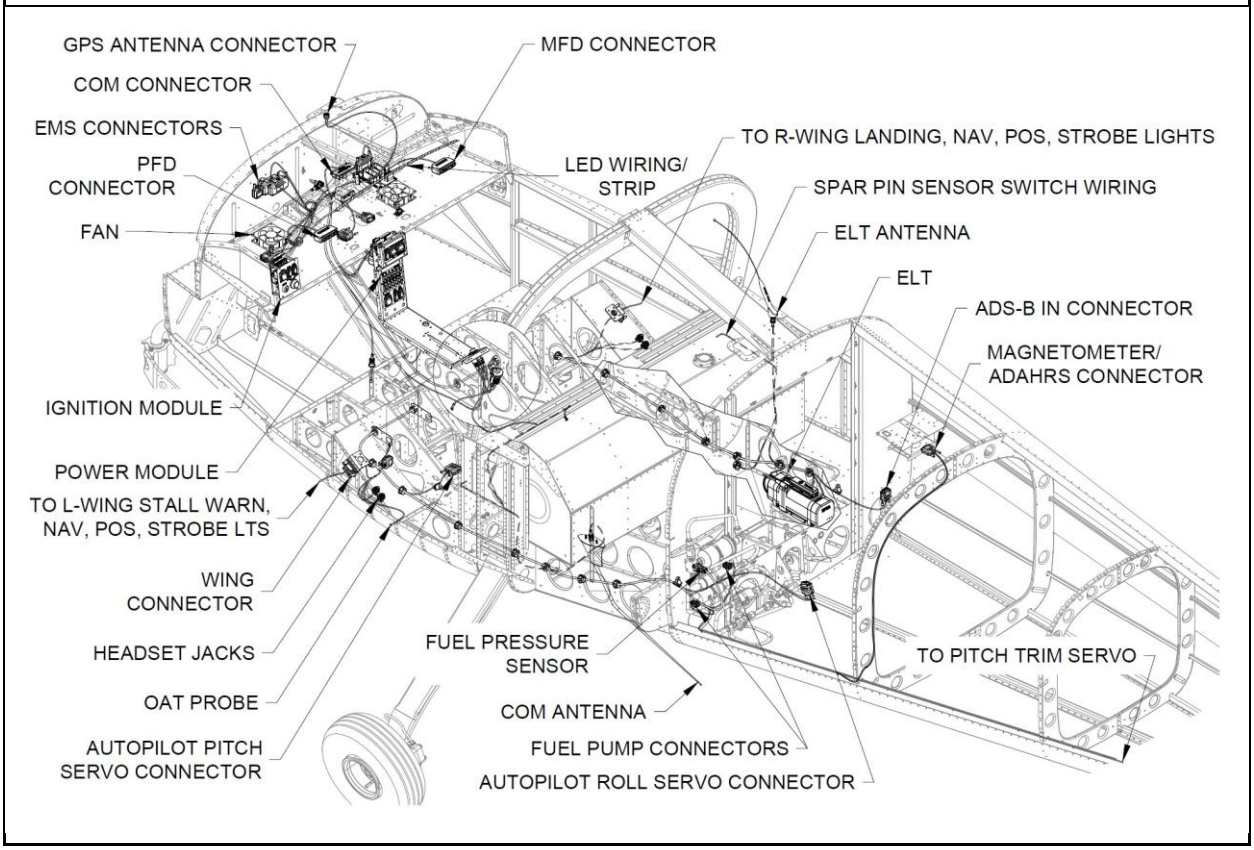

● ***NOTE: FOR A SCHEMATIC OF THE ELECTRICAL SYSTEM REFER TO THE POH OR GO TO THE DOWNLOADS PAGE AT WWW.VANSAIRCRAFT.COM***

OVERVIEW

▲ ***WARNING: THE RV-12iS (ULS) FUSE MODULE IS NOT SERVICEABLE. SERIOUS RISK OF ELECTRIC SHOCK REMAINS AFTER THE POWER SUPPLY IS REMOVED.***

The RV-12iS electrical system is a 12 VDC, negative ground system equipped with either an EarthX Lithium (LiFePO4) (iS) or Odyssey lead/acid dry cell (ULS) style battery mounted on the forward right side of the firewall. The generator operates only while the engine is running. The generator supplies power to the regulator, which serves the primary aircraft power system and charges the battery. The primary aircraft power is a 30 amp fused circuit. Lights, servos, fans, avionics, and control switches are all fused secondary circuits and part of the primary circuit.

● ***NOTE: This addendum is intended to be used in conjunction with the RV-12iS maintenance manual when completing maintenance or repair processes.***

COMPONENTS

Quantity	Part or Assembly Name	Part Number or Reference
1	Led Glareshield light	ES LED GLARESHIELD LIGHT
1	MOLEX PLUG, 2 POSITION MICRO-FIT	ES-00152

LIGHTING

The red LED strip cockpit light. See Figure 20. The wing tip light mounts in the extension which attaches to the wing tip. The landing light is mounted to the landing light rib which is attached inside the wing skin. The red LED strip cockpit light mounts to the underside of the canopy glare shield.

SERVICE

▲WARNING: ALWAYS HAVE AN APPROPRIATE FIRE EXTINGUISHER READILY AVAILABLE.

▲WARNING: BEFORE PERFORMING ANY MAINTENANCE OR REPAIRS TURN THE MASTER SWITCH 'OFF' AND DISCONNECT THE NEGATIVE (-) BATTERY CABLE FROM THE BATTERY.

■ CAUTION: REPLACEMENT COMPONENTS, WIRE, TERMINALS, AND FUSES MUST BE OF THE SAME TYPE AND RATING AS THE ORIGINAL PARTS.

There are no serviceable electrical components. Replace malfunctioning or failed components.

SUPPLIES

TOOLS	EXPENDABLE
♦ Wire terminal crimping tool ♦ Wire cutter ♦ Multi-meter ♦ Razor knife	♦ Wire terminals: ▪ Splice ▪ Spade (male/female) ▪ Ring
	REPLACEABLE
	♦ ES LED GLARESHIELD LIGHT ♦ ES-00152

GENERAL

LC COB LED STRIP RED Replacement

▲ WARNING: BEFORE PERFORMING ANY MAINTENANCE OR REPAIRS TURN THE MASTER SWITCH 'OFF' AND DISCONNECT THE NEGATIVE (-) BATTERY CABLE FROM THE BATTERY.

■ CAUTION: REPLACEMENT COMPONENTS, WIRE, TERMINALS, AND FUSES MUST BE OF THE SAME TYPE AND RATING AS THE ORIGINAL PARTS.

Special Tools	None
Expendable	None
Replaceable	See component list on page A-3-2
Service Rating	Line
Minimum Certification	LSA-RM or A&P

1. Open Canopy
2. Make note of the hardware configuration, length and placement.
3. Lightly pull down on harness to expose MOLEX PLUG, Label the wires. Disconnect the wires at MOLEX PLUG.

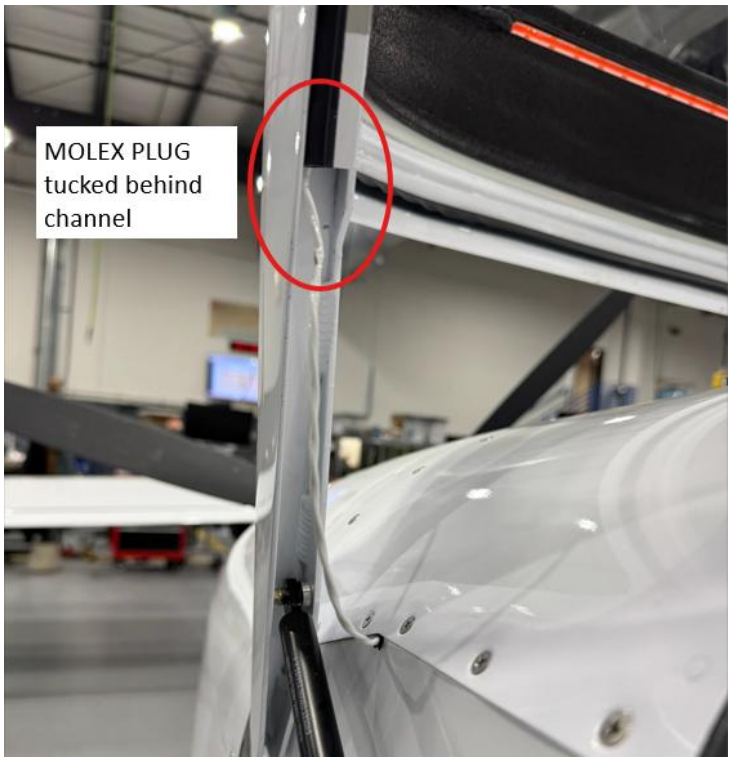

4. Light strip is held in place by adhesive backing and wiring secured with black RTV.
5. Pull wiring through from inside the cockpit, noting the path of the wiring as you pull through.
6. Route new LED strip wiring in reverse of removal

7. Re connect to MOLEX PLUG
8. Apply a small bead of black RTV in the same location as the previous wiring

9. Secure with tape, clamps can be used to secure the base of the LED strip

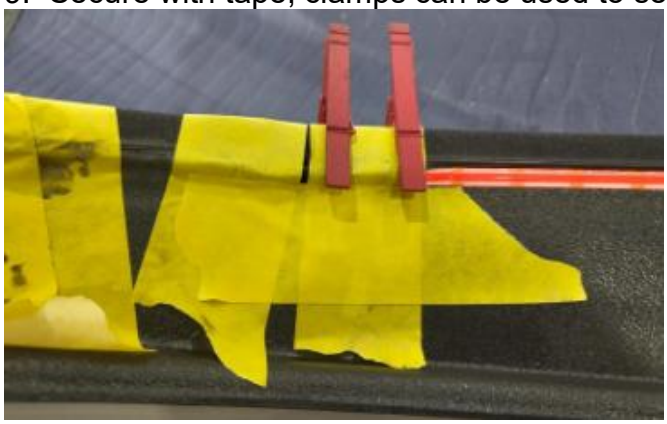

10. LED Strip as installed

ADDENDUM A-4: CH 9-INSTRUMENTS & AVIONICS – PITOT, ALT STATIC, AOA

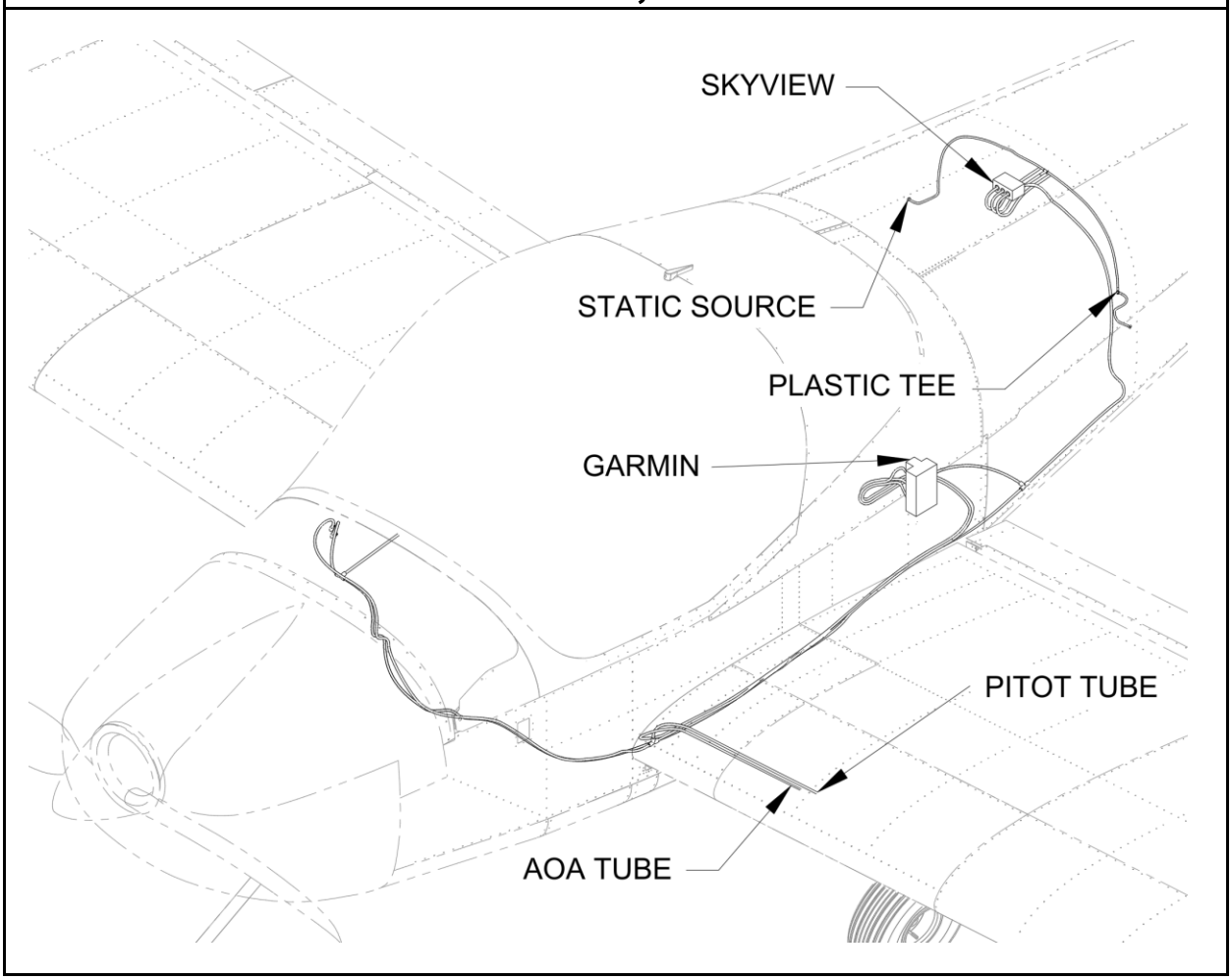

- ***NOTE: This addendum is intended to be used in conjunction with the RV-12iS maintenance manual and Kit Assembly Instruction (KAI) when completing maintenance or repair processes.***

PITOT, STATIC & AOA COMPONENTS

ITEM NO.	PART NO.	DESCRIPTION	QTY
1	AN526C832R8	Screw, SS #8, 5/32" x 1/2"	4
2	ES-5172069-1	Pin Connector	1
3	F-00034A	Wing Electrical Bracket, AOA	1
4	FLF-00012	AOA Fitting	2
5	FLF-00012-1	AOA Fitting, Bulkhead	2
6	FLF-00012-2	Nut, AOA Bulkhead Fitting	2
7	FLF-00015-1	Guide, AOA Wing Connect	2
8	MS21044N04	Nut, Nylon Lock	2
9	AN365-832A	Nut, Nylon Lock	2
10	MS35206-218	Screw, Pan Head, 4-40 x 5/8"	2
11	MS35206-246	Screw, Pan Head, 8-32 x 5/8"	2
12	NAS1149FN832P	Flat Washer #8 Screw	8
13	See Garmin G3X Manual	GAP 26 Pitot/AOA Probe	1
14	W-00039-001	Mount, Wing, Pitot Tube	1
15	W-00039-002	Mount, Wing, Pitot Tube	1
16	W-12002-001	Pitot Mast Doubler	1
17	W-12003-001	Stiffener	1
18	WD-00004-001	Pitot Mast with Tabs	1
19	FLF-00007	Push to Connect Elbow	2
20	FLF-00028	Union, ¼" Tube to 1/8" NPT	1
21	FLF-00029	Tee, ¼" Tube	3
22	FLF-TV-2SP	Alt Static Port	1

SERVICE

▲WARNING: ALWAYS HAVE AN APPROPRIATE FIRE EXTINGUISHER READILY AVAILABLE.

▲WARNING: BEFORE PERFORMING ANY MAINTENANCE OR REPAIRS TURN THE MASTER SWITCH 'OFF' AND DISCONNECT THE NEGATIVE (-) BATTERY CABLE FROM THE BATTERY.

■ CAUTION: REPLACEMENT COMPONENTS, WIRE, TERMINALS, AND FUSES MUST BE OF THE SAME TYPE AND RATING AS THE ORIGINAL PARTS.

Note: Coil and secure wiring for future Heated Pitot.

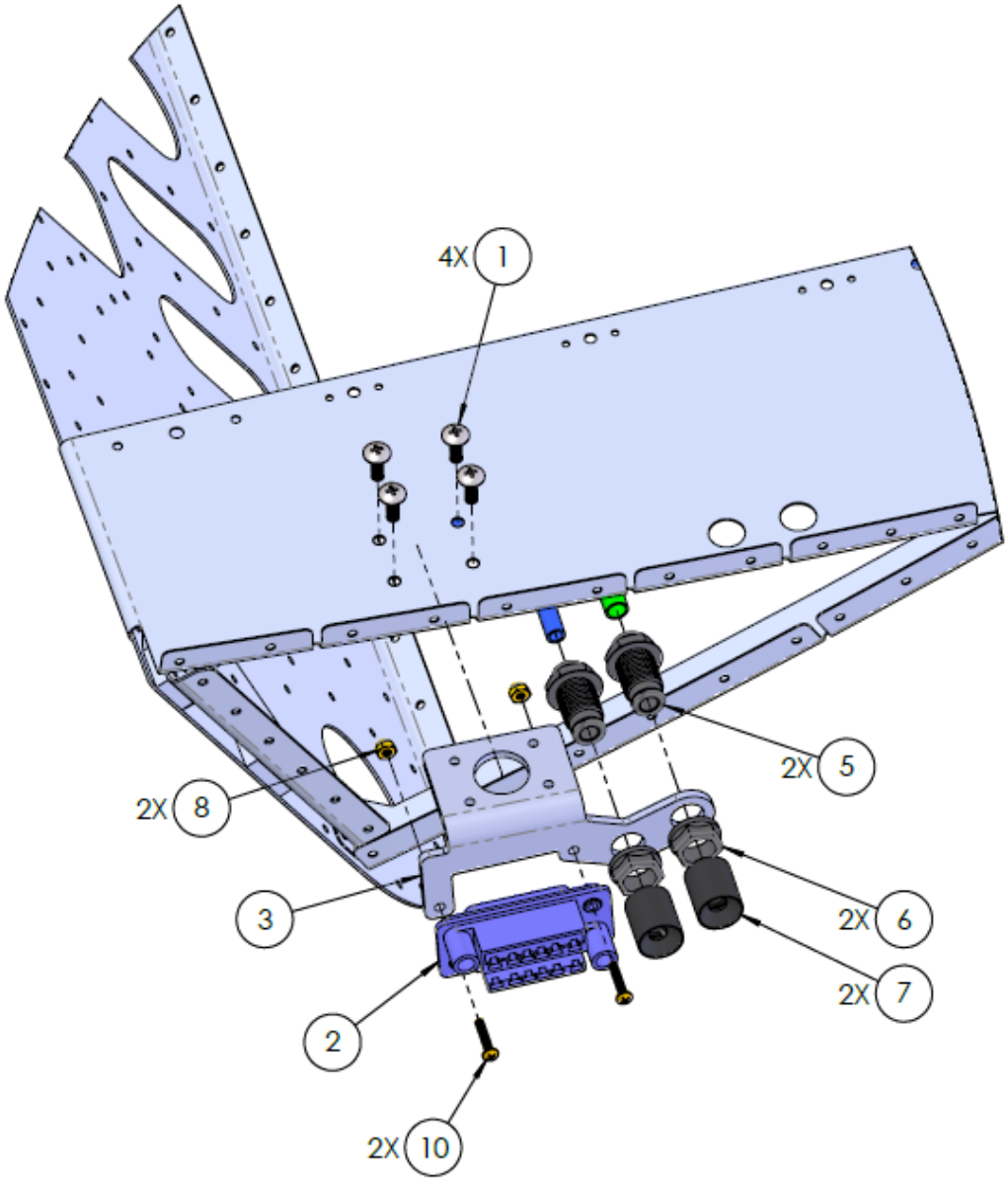

WING AND ACCESS PANEL MUST BE REMOVED

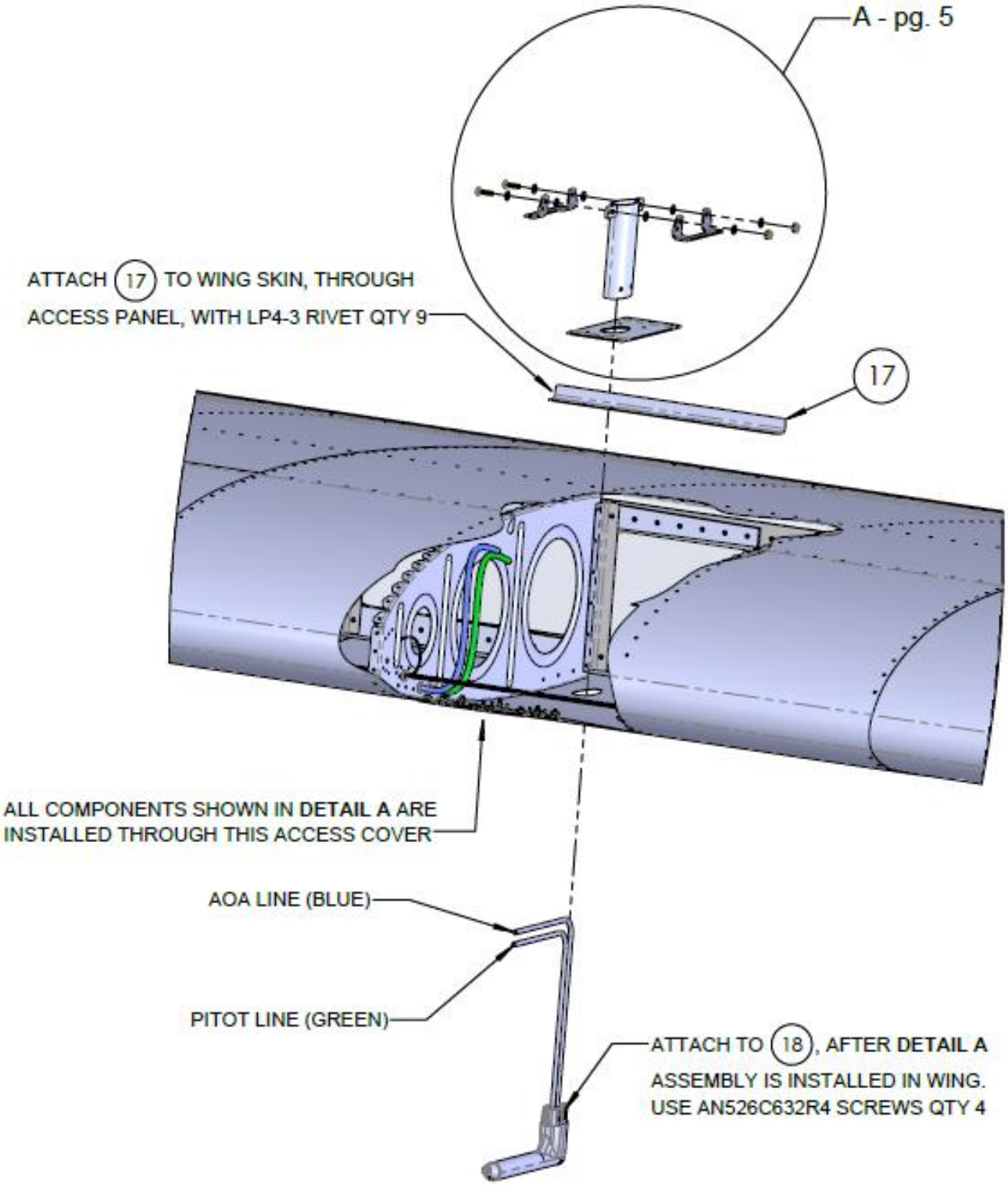
A - pg. 5
ATTACH 17 TO WING SKIN, THROUGH
ACCESS PANEL, WITH LP4-3 RIVET QTY 9
17
ALL COMPONENTS SHOWN IN DETAIL A ARE
INSTALLED THROUGH THIS ACCESS COVER
AOA LINE (BLUE)
PITOT LINE (GREEN)
ATTACH TO 18, AFTER DETAIL A
ASSEMBLY IS INSTALLED IN WING.
USE AN526C632R4 SCREWS QTY 4

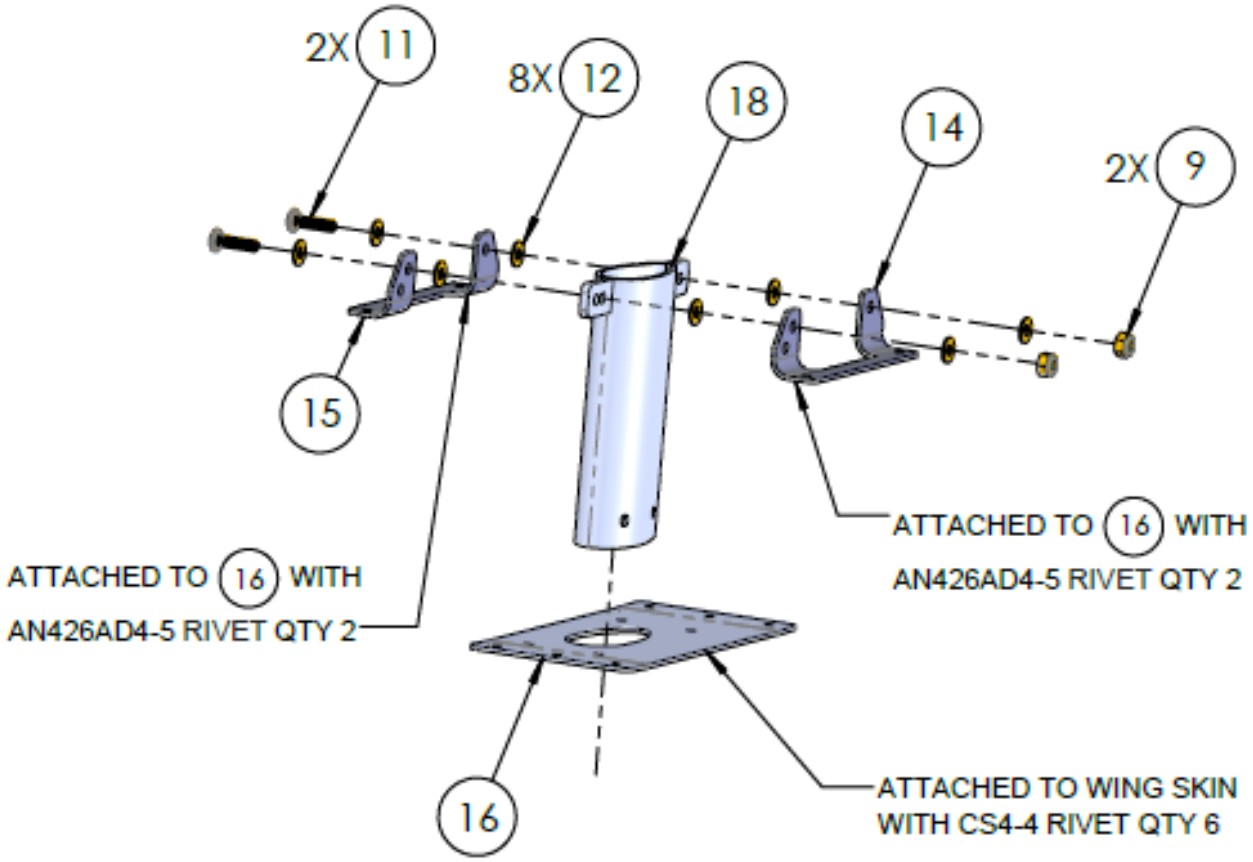

DETAIL A - pg. 4
ASSEMBLE PRIOR TO INSTALLING IN WING

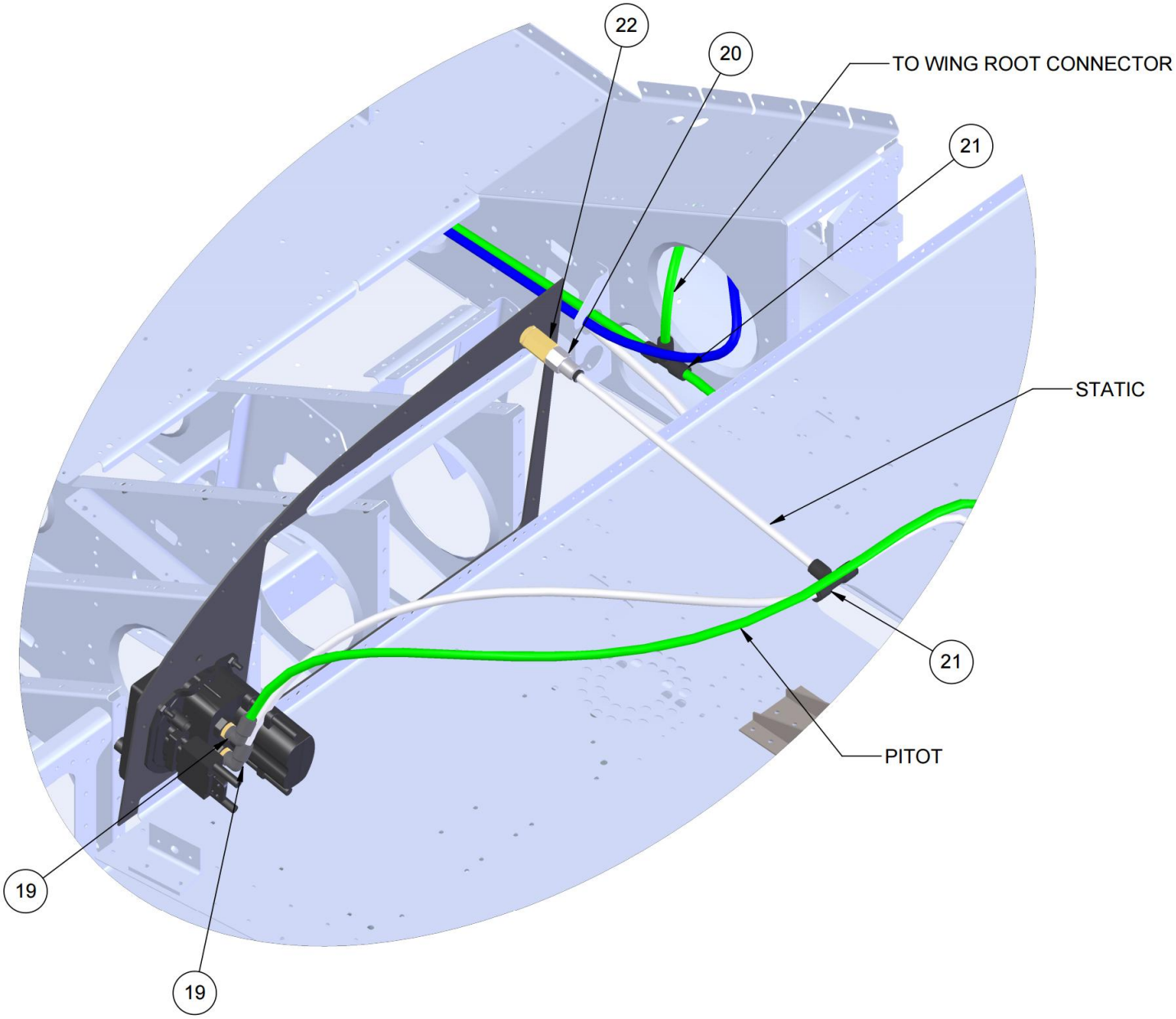
22
20
TO WING ROOT CONNECTOR
21
STATIC
21
PITOT
19
19

ADDENDUM A-5: CH 7-ALT INDUCTION AIR

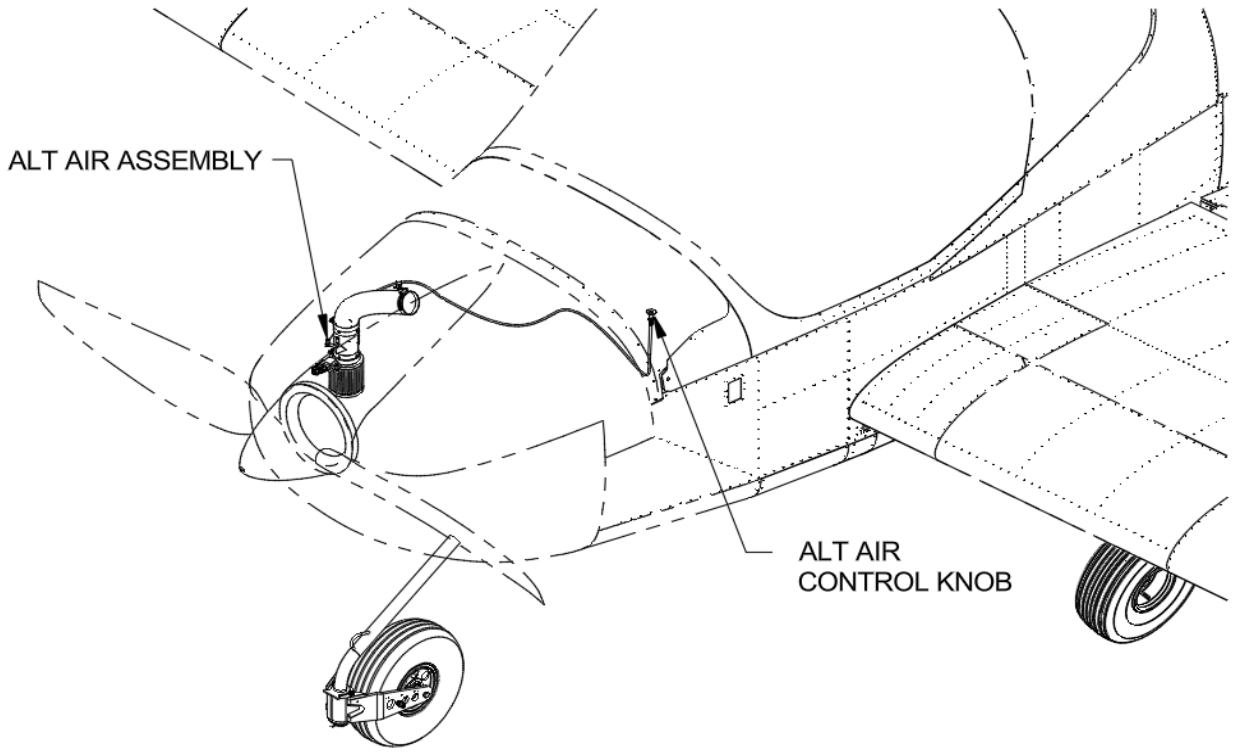

OVERVIEW

The engine includes an alternate induction air system to provide emergency engine air supply by opening a valve to bypass primary induction air supply. It acts as an emergency safety mechanism to maintain engine power during unintentional flight into icing.

- ***NOTE: This addendum is intended to be used in conjunction with the RV-12iS maintenance manual when completing maintenance or repair processes.***

COMPONENTS

ITEM NO.	PART NO.	DESCRIPTION	QTY
1	12iS ALTERNATE AIR	Alt Air Assembly	1
2	COWL, 12iS TOP	Top Cowling	1
3	K&N RU-0800	Air Filter	1
4	CT A-740	Bowden Cable	1
5	VA-181-1	Wire Nut	1

SUPPLIES

SPECIAL TOOLS	CONSUMABLES
• None	• None
	REPLACEABLE
	• See components list.

SERVICE

ALT AIR ASSEMBLY REPLACEMENT

1. Set alt air control knob to OFF position.

ALT AIR CONTROL KNOB

2. Remove upper cowling (see Ch. 12 - Cowling Removal)
3. Loosen wire nut set screw on alt air assembly and remove Bowden cable from alt air assembly.
4. Remove screw from HW-00021 Bowden Cable Clamp.
5. Loosen hose clamps (2) between alt air assembly, air filter, and air filter hose.
6. Remove alt air assembly from air filter and air filter hose.

INSTALLATION

1. Installation procedure for new alt air assembly is reverse of the removal procedure.

● ***NOTE: THE WIRE NUT IS FACING UP AS SHOWN WHEN INSTALLED CORRECTLY. EXTEND BOWDEN CABLE SHEATH PAST THE BOWDEN CABLE CLAMP BY 1/4 TO 1/2 IN.***

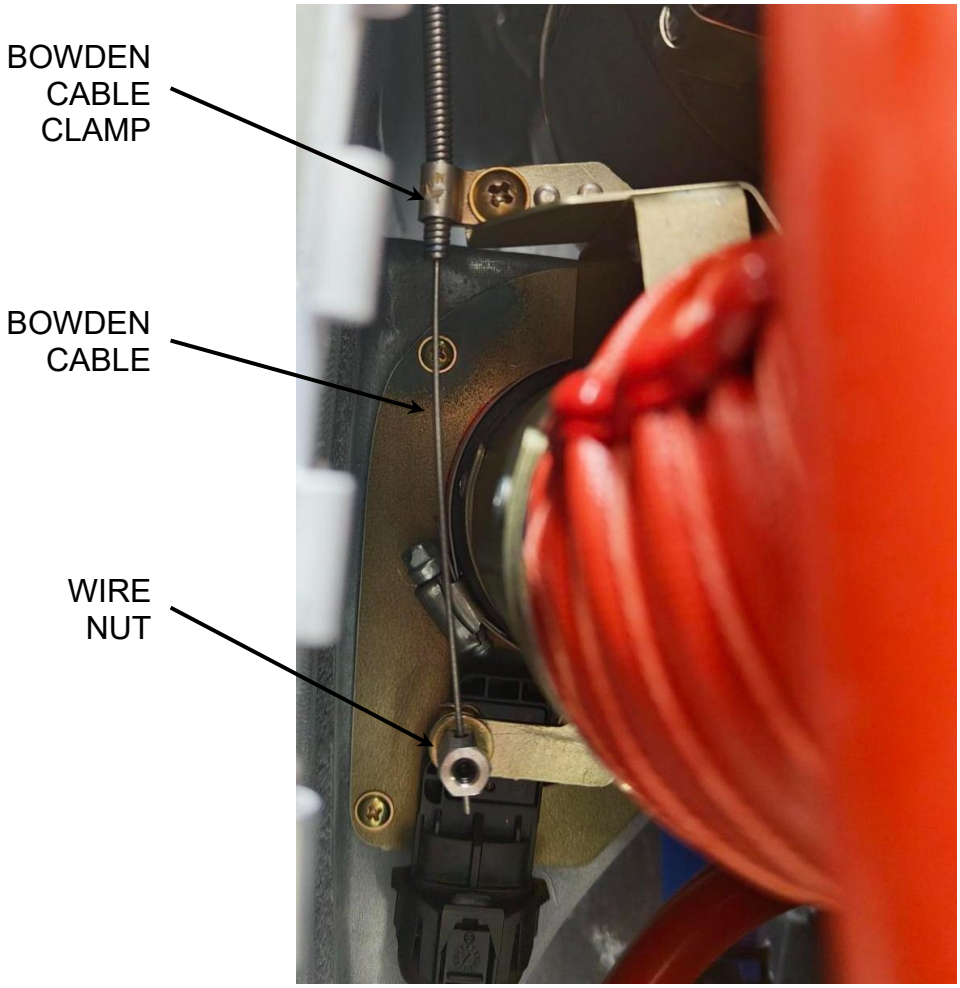

ADDENDUM A-6: CH 12-AUX ALTERNATOR

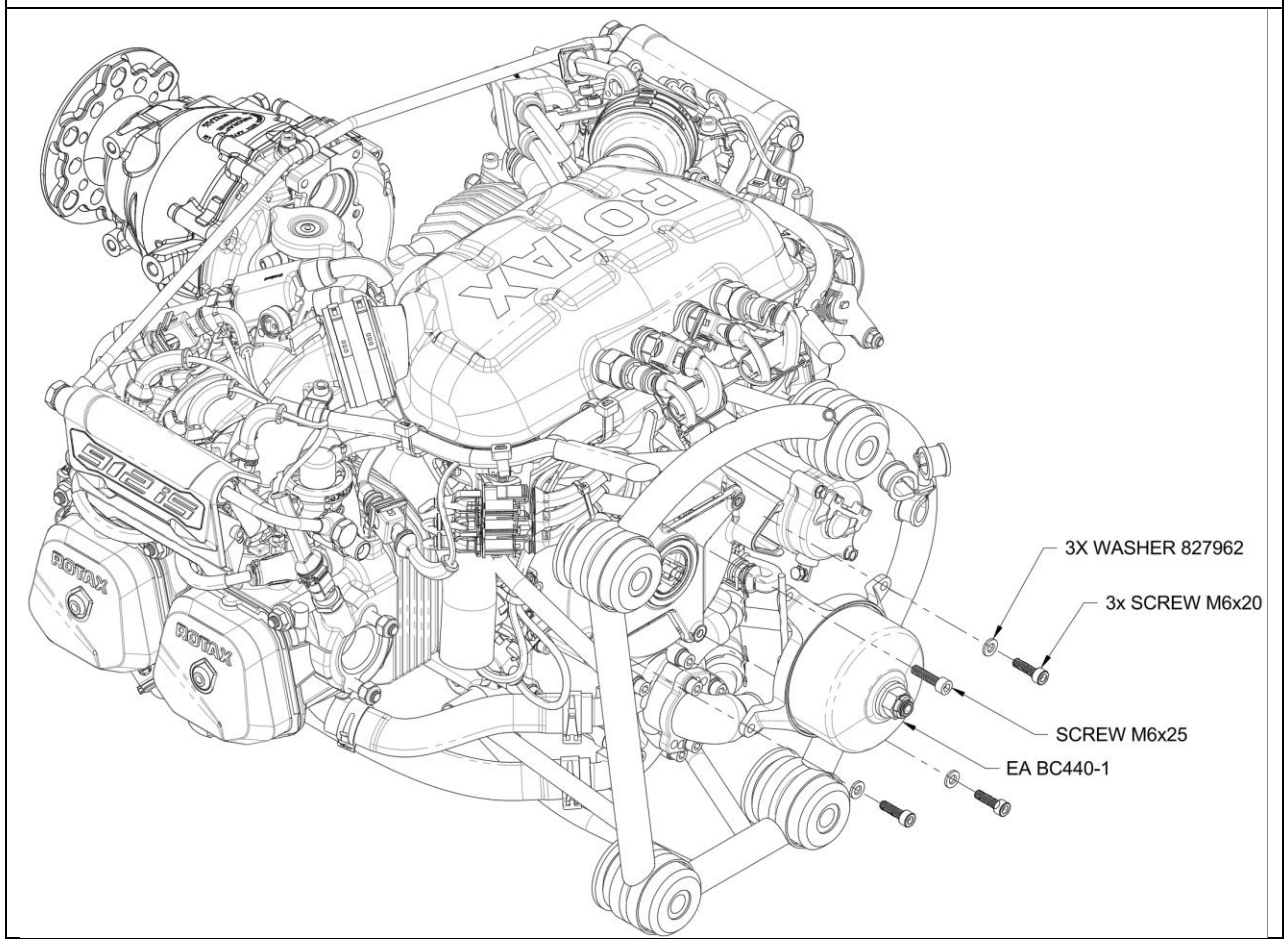

OVERVIEW

The engine includes an auxiliary alternator to provide a safe buffer of power to all systems in the aircraft. The need for the alternator is primarily used to power the heated pitot in cold conditions. However, this also helps reduce load on the primary generator and provide additional safety margin in emergency situations.

- ***NOTE: This addendum is intended to be used in conjunction with the RV-12iS maintenance manual when completing maintenance or repair processes.***

COMPONENTS

ITEM NO.	PART NO.	DESCRIPTION	QTY
1	EA BC440-1	Auxiliary Alternator	1
2	SCREW M6x25	25mm M6 SHCS	1
3	SCREW M6x20	20mm M6 SHCS	3
4	WASHER 827962	WASHER 6.4 DIN 125, ROTAX CERT.	3
5			1

SUPPLIES

SPECIAL TOOLS	CONSUMABLES
• Torque Wrench	• Loctite 245
	REPLACEABLE
	• See components list.

SERVICE

AUX ALTERNATOR REPLACEMENT

1. Remove the cowling (See Ch. 12 – Cowling Removal)
2. Loosen wire nut set screw on alt air assembly and remove Bowden cable from alt air assembly.
3. Disconnect the alternator supply lines from the EA PMR1D
4. Remove the engine (see Ch. 12 – Engine Replacement)
5. Remove the 4x M6 screws from the generator housing and pull off the alternator. Note the locations of the screws. The M6x25 screw is used for the mount point that shares the adell clamps. It will bottom out on the other corners.
6. If you need to remove the Power Transfer Plug, using a M14 Hex bit, refer to Rotax SI-PAC-023R2 dated 04 September 2024.

INSTALLATION

1. Installation procedure for the aux alternator is reverse of the removal procedure.