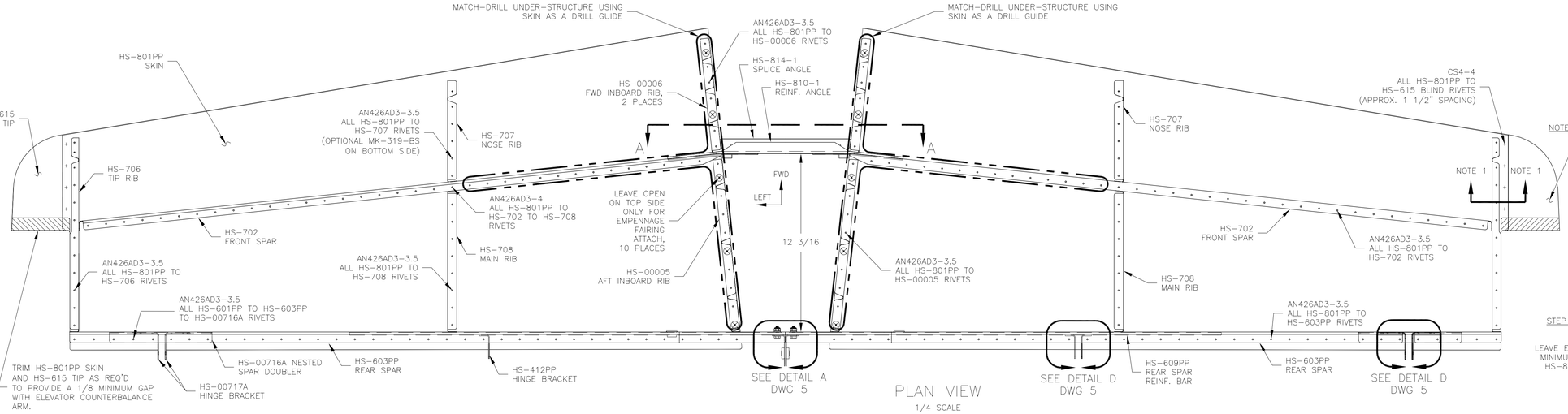

PLAN VIEW
1/4 SCALE

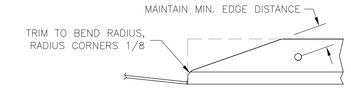

SECTION F-F
3/4 SCALE

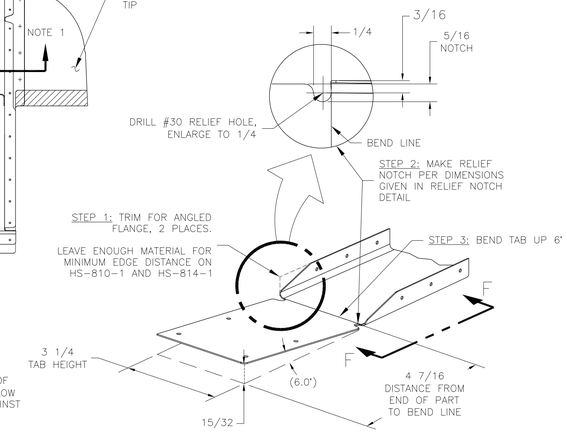

HS-702 FRONT SPAR TAB DETAIL
NO SCALE
PART AS SUPPLIED MUST BE MODIFIED

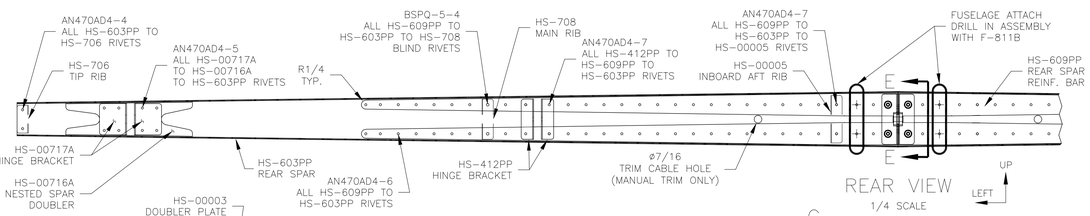

REAR VIEW
1/4 SCALE

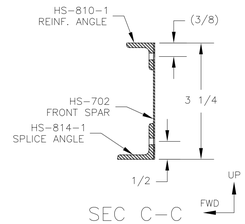

SEC C-C
1/2 SCALE

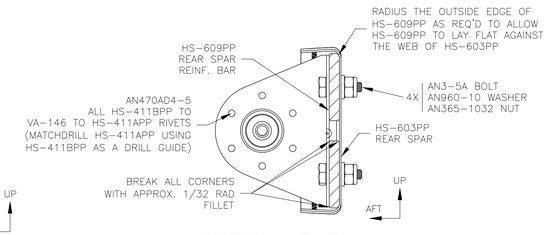

SECTION E-E
3/4 SCALE

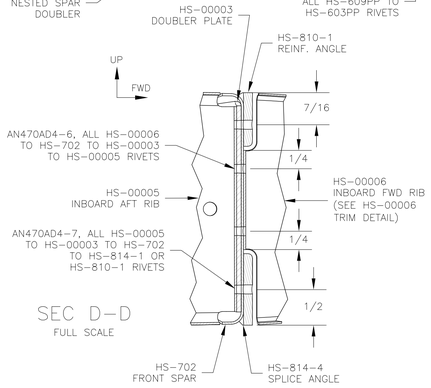

SEC D-D
FULL SCALE

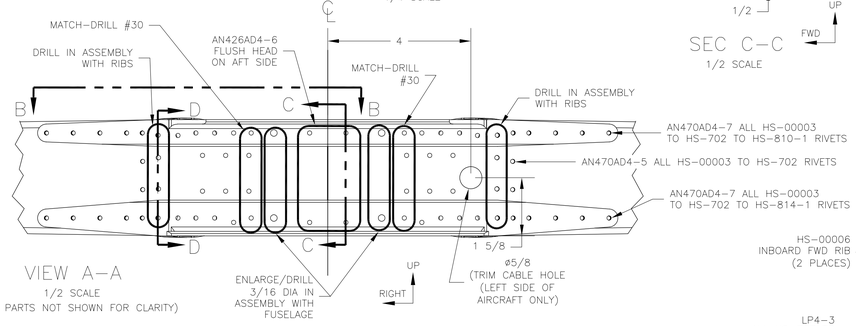

VIEW A-A
1/2 SCALE
(SOME PARTS NOT SHOWN FOR CLARITY)

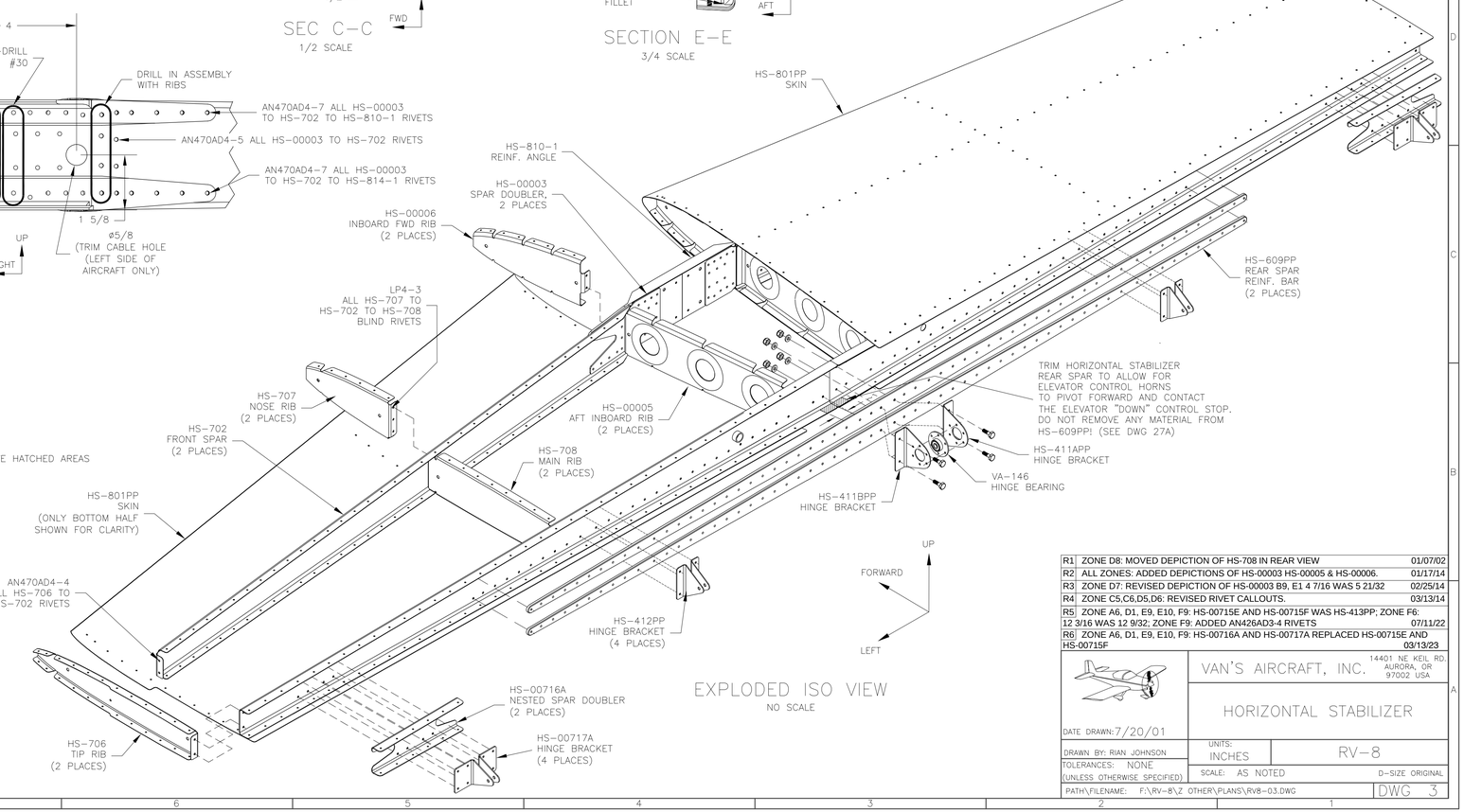

EXPLODED ISO VIEW
NO SCALE

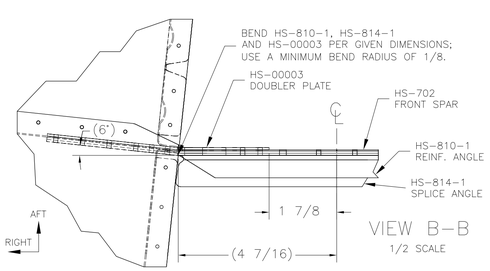

VIEW B-B
1/2 SCALE

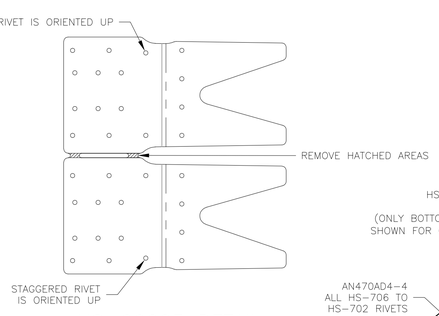

HS-00003 DETAIL
(1/2 SCALE)

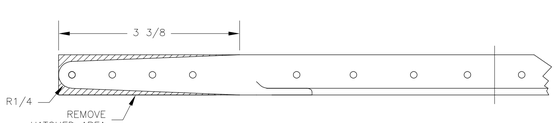

HS-810-1/HS-814-1 TAPER DETAIL
HS-810-1 SHOWN, HS-814-1 TRIM IS SIMILAR
3/4 SCALE

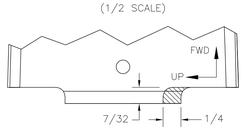

HS-00006 TRIM DETAIL
FULL SCALE; LEFT SHOWN; LEFT & RRIGHT REQ'D

R1	ZONE D8: MOVED DEPICTION OF HS-708 IN REAR VIEW	01/07/02
R2	ALL ZONES: ADDED DEPICTIONS OF HS-00003 HS-00005 & HS-00006.	01/17/14
R3	ZONE D7: REVISED DEPICTION OF HS-00003 B9, E1 4 7/16 WAS 5 21/32	02/25/14
R4	ZONE C5,C6,D5,D6: REVISED RIVET CALLOUTS.	03/13/14
R5	ZONE A6, D1, E9, E10, F9: HS-00715E AND HS-00715F WAS HS-413PP; ZONE F6: 12 3/16 WAS 12 9/32; ZONE F9: ADDED AN426AD3-4 RIVETS	07/11/22
R6	ZONE A6, D1, E9, E10, F9: HS-00716A AND HS-00717A REPLACED HS-00715E AND HS-00715F	03/13/23

VAN'S AIRCRAFT, INC.
14401 NE KEIL RD.
AURORA, OR
97002 USA

HORIZONTAL STABILIZER

DATE DRAWN: 7/20/01
DRAWN BY: RIAN JOHNSON
TOLERANCES: NONE
(UNLESS OTHERWISE SPECIFIED)
UNITS: INCHES
SCALE: AS NOTED
RV-8
D-SIZE ORIGINAL
PATH\FILENAME: F:\RV-8\Z OTHER\PLANS\RV8-03.DWG
DWG 3