SECTION 38: CANOPY AND WINDOW

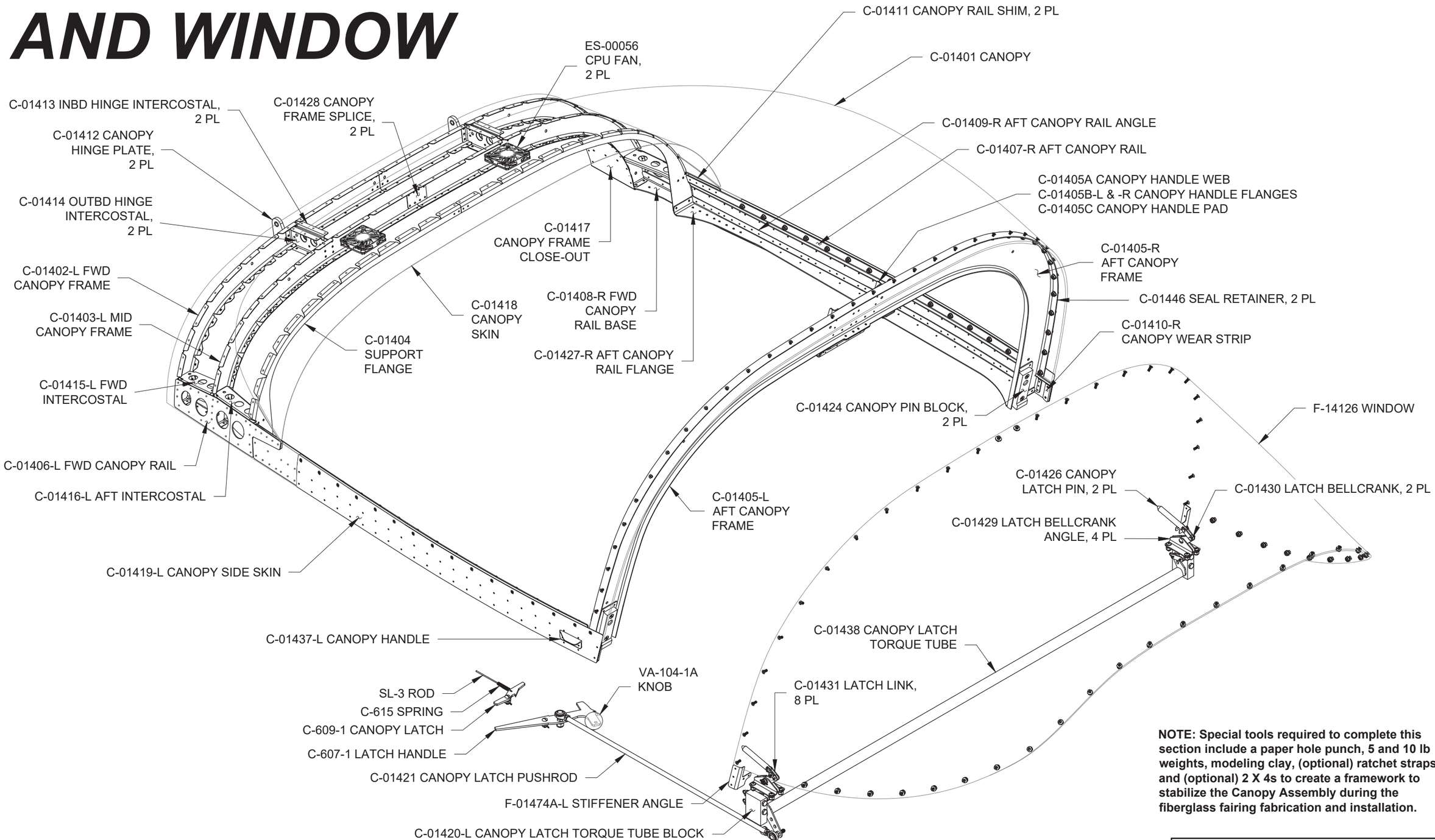

NOTE: Special tools required to complete this section include a paper hole punch, 5 and 10 lb weights, modeling clay, (optional) ratchet straps, and (optional) 2 X 4s to create a framework to stabilize the Canopy Assembly during the fiberglass fairing fabrication and installation.

DATE OF COMPLETION: _____
PARTICIPANTS: _____

NOTE: Review Section 5.19 before proceeding.

NOTE: Adjusting the window left or right too aggressively will cause an edge-distance problem later.

Step 1: Position the F-14126 Window on the fuselage as shown in Figure 1.

Slide the window aft against the F-01432B-L & -R Roll Bar Brace Brackets shown in Figure 2. Align the centerline mark on the aft edge of the window with the centerline rivet hole in the F-01475 Top Skin.

Push the lower forward edges of the window aft in order to force the window against the fuselage skin and reduce any gaps along the sides. Adjust the window as necessary to gain the most consistent overhang with respect to the F-01431D Window Shim, and to achieve equal edge distance with the F-01474-L & -R Side Skins. See Figure 1.

Step 2: Clamp the window to the Roll Bar Assembly as shown in Figure 1. Install additional clamps forward of the window edge to prevent the window from shifting forward. See Figure 1.

Step 3: Mark the inside of the window in the area where it contacts the F-01432B-L & -R Roll Bar Brace Brackets. See Figure 2.

Step 4: Measure the distance that the window overhangs the F-01431D Window Shims along the entire forward edge and make a note of the smallest overhang distance. See the detail view in Figure 1.

Step 5: Mark the new position of the window centerline on the Roll Bar Assembly, skin, and window. Remove the window.

Step 6: Trim the smallest overhang distance noted in Step 4 from the aft edge of the window between the roll bar brace bracket marks made in Step 3.

Round the edges of the trimmed areas.

Step 7: Reinstall and verify the fit of the window as described in Step 1 and Step 2.

NOTE: The best fit can be obtained by ensuring that only the bare surface of the window directly contacts the aircraft structure.

Step 8: Trace the perimeter of the fuselage onto the protective plastic that covers the outside of the window. Trace along the edges of the fuselage skins and the aft edge of the F-01431D Window Shims. See Figure 1.

Step 9: Remove the window, then peel back and trim the protective plastic on the inside and outside of the window. Trim from the edge to just beyond the perimeter lines.

Step 10: Reinstall and verify the fit of the window as described in Step 1 and Step 2.

NOTE: The adhesive used on some brands of electrical tape may be incompatible with acrylic or Lexan. Test the tape on a scrap of material before use. In all cases, do not leave the tape on the canopy for extended periods of time (more than two days).

Step 11: Apply a line of quality tape (masking or electrical) to the outside of the window. Align the edge of the tape with the edge of the skins.

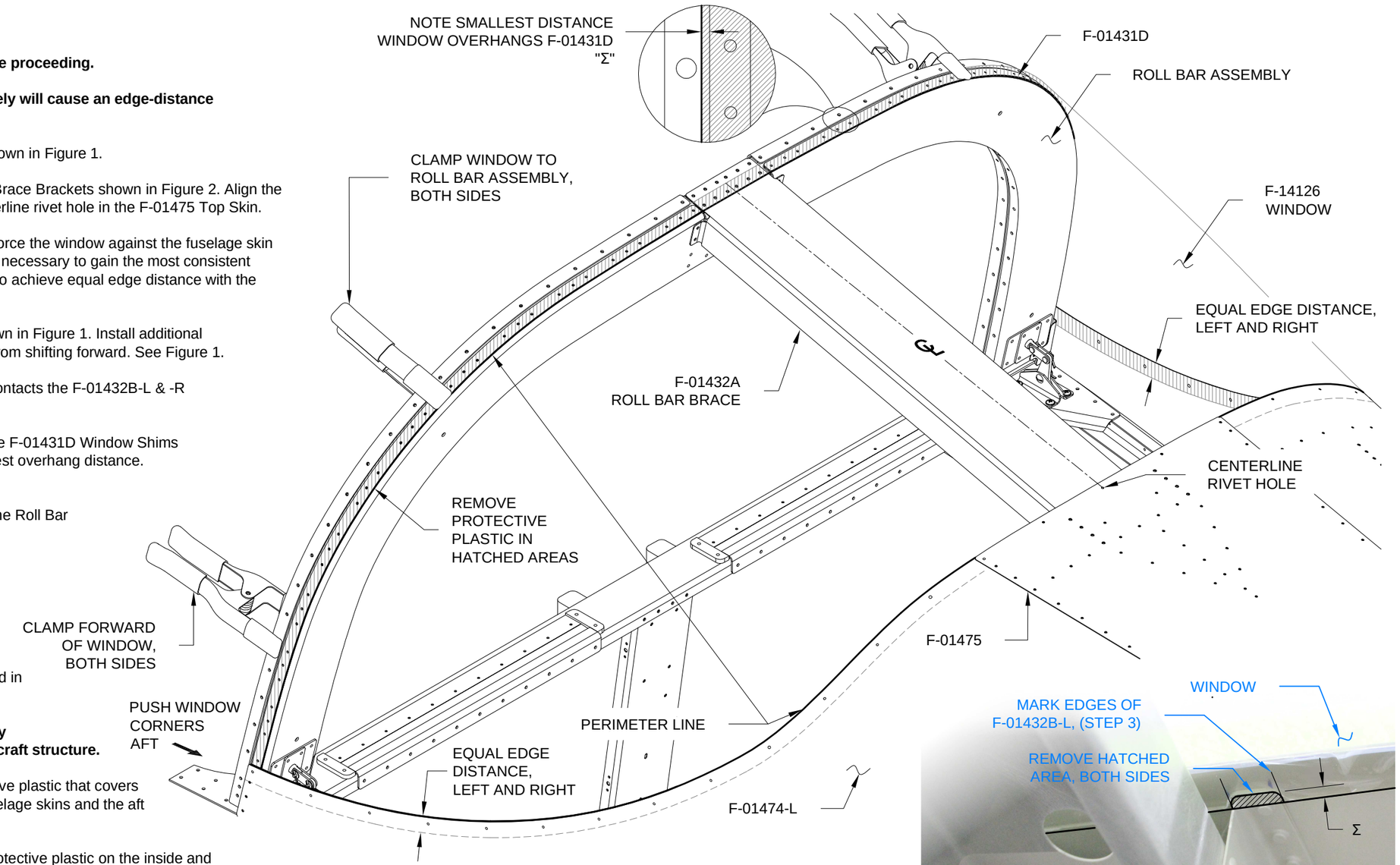

FIGURE 1: WINDOW PLACEMENT

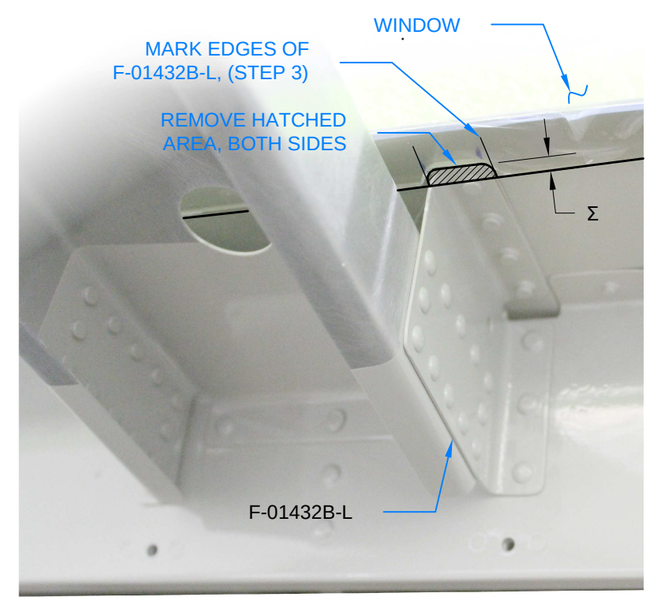

FIGURE 2: TRIM WINDOW TO FIT ROLL BAR BRACE BRACKETS

NOTE: When drilling the window, be aware of visual distortion due to paralax. Aways drill perpendicular to the surface of the window or skin. Remove any drill shavings trapped between the window and skins after drilling each hole.

NOTE: For all steps on this page, refer to Figure 1.

Step 1: Insert a spacer between the window and the F-01432A Roll Bar Brace near the aft edge of the window. This will prevent unwanted bending while match-drilling in the next steps. Rolled up cardboard or rubber works well here.

Step 2: Match-Drill #40 and cleco the aft centerline hole in the F-01475 Aft Fuse Top Skin into the window. See call-out "1".

NOTE: Particularly around call-outs "5" and "7", always drill perpendicular to the surface of the window, not to the Roll Bar Assembly.

Step 3: Match-Drill #40 the remaining holes in the F-01474-L & -R Top Side Skins into the window, and drill #40 through the window into the underlying holes in the Roll Bar Assembly. Follow the numbered drilling order call-outs symmetrically, and cleco each hole as it is drilled.

Have a helper position a wood back-up block underneath each hole match-drilled from the skins. This will help to keep the window tight against the skins, prevent chipping around the drill exit hole, and greatly reduce the risk of cracks.

After drilling each set of holes, remove the clamps and push the lower corners of the window aft to ensure a tight fit against the skins and re-clamp.

Step 4: Final-Drill #36 and tap 6-32 the window attach holes common to the window and Roll Bar Assembly. Both the window and Roll Bar Assembly are tapped. Follow the numbered drilling order call-outs "3", "5", "7", "9", and the forward hole of "10" symmetrically. Gently insert the screws into each hole after final-drilling and tapping. See the "STEP 4" call-outs in the detail views.

Step 5: Remove all the screws installed in Step 4 except for the screws indicated by the "STEP 5" call-outs.

Step 6: Use edge of a strip of quality masking tape to mark the trim line on the outside of the window as shown in the detail view (see the "STEP 6" call-out). Trim the tape to expose the window attach screws remaining from Step 5.

Step 7: Remove the window.

Step 8: Final-Drill #27 all of the holes in the window. Position a wood back-up block underneath each hole as it is drilled.

Step 9: As called out, machine-countersink the holes in the window to fit either the head of an AN507 screw or a dimpled .025 skin.

Step 10: Trim the forward edge of the window back to the trim line marked in Step 6.

Step 11: Bevel the edges of the window as shown in the detail views.

Step 12: Use fine grit sandpaper to remove all visible scratches from the trimmed and beveled edges.

Step 13: Break the edges of the F-01475 Top Skin and the F-01474-L & -R Top Side Skins to fit tightly against the window.

Step 14: Final-Drill #27 the window attach holes in the F-01475 Top Skin and the F-01474-L & -R Top Side Skins.

Step 15: Dimple the holes final-drilled in Step 14.

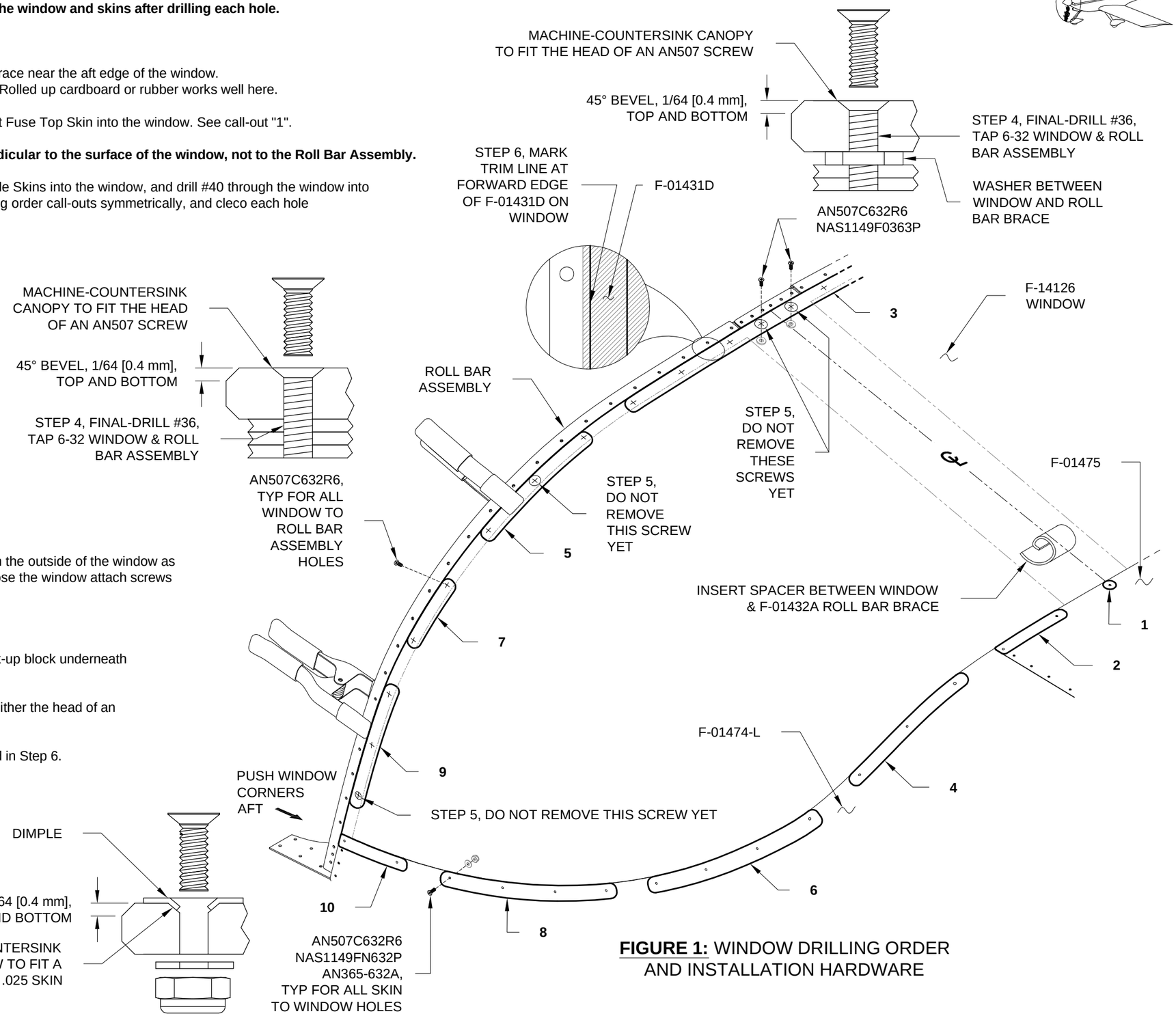

FIGURE 1: WINDOW DRILLING ORDER AND INSTALLATION HARDWARE

Step 1: Dimple the holes in the F-01474A-L & -R Stiffener Angles as shown in Figure 1.

Step 2: Separate the F-01474A-L & -R Stiffener Angles as shown in Figure 1.

Step 3: Rivet the F-01474A-L & -R Stiffener Angles to the F-01474-L & -R Aft Fuse Top Side Skins, then to the Roll Bar Assembly using the rivets called out in Figure 2.

Step 4: Rivet the remaining holes common to the F-01474-L & -R Aft Fuse Top Side Skins and F-01470-L & -R Fuselage Side Skins using the rivets called out in Figure 2.

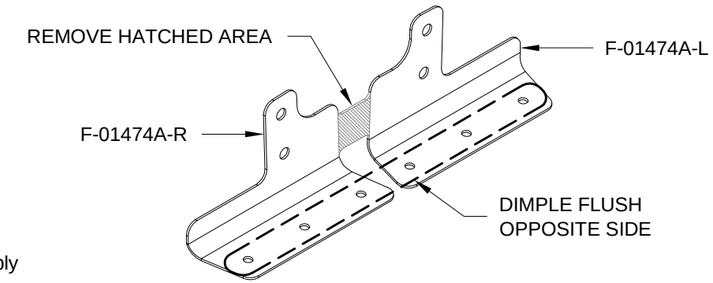

FIGURE 1: STIFFENER ANGLES

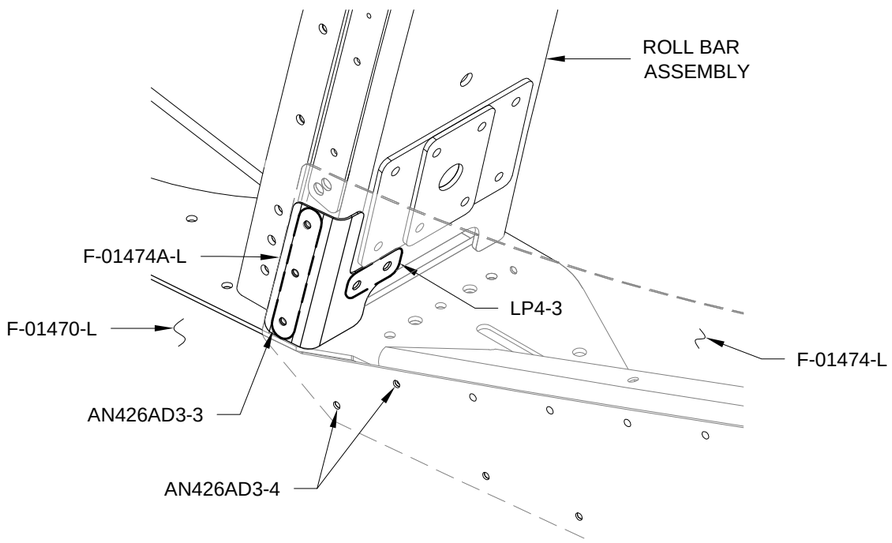

FIGURE 2: RIVET STIFFENER ANGLES AND SIDE SKINS

NOTE: To protect the window and retain optimum access to the fuselage, delay the final installation of the window as long as possible.

Step 5: Carefully slide the window into position and install the hardware as shown on Page 38-03, Figure 1. Apply a dab of silicone to the screws before installing them into the Roll Bar Assembly. Use low torque on the screws to minimize stress on the window. Leave the screws common to the window and the aft fuse top side skins loose for now.

Step 6: Apply a line of masking tape to the window along the top edge of the skins.

Step 7: Carefully push the window inboard and apply a thin smear of fuel tank sealant along the outside of the window below the tape.

Step 8: Tighten the remaining window attach hardware. Use low torque on the screws to minimize stress on the window.

Step 9. While the fuel tank sealant is still wet, remove the masking tape.

Step 10: Separate the C-01429 Latch Bellcrank Angles as shown in Figure 3.

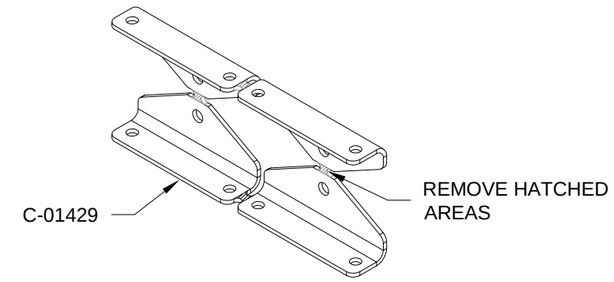

FIGURE 3: SEPARATE LATCH BELLCRANK ANGLES

Step 11: Separate the C-01431 Latch Links as shown in Figure 4.

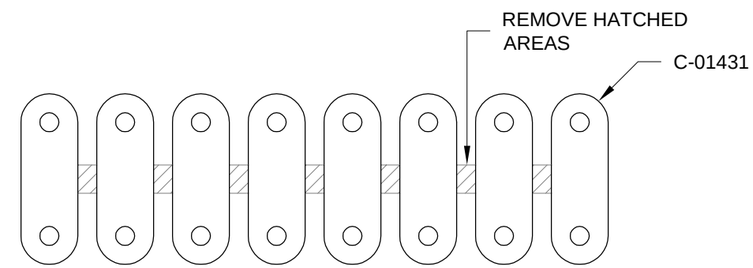

FIGURE 4: LATCH LINKS

NOTE: For Steps 1-8, refer to Figure 1.

Step 1: Use a straight edge to check the C-607-1 Latch Handle and C-609-1 Canopy Latch for flatness. Bend the parts as necessary to flatten them.

Step 2: Deburr the the C-607-1 and C-609-1.

Step 3: Final-Drill all holes in the C-607-1 and C-609-1.

Step 4: Attach the VA-104-1A Knob to the C-607-1.

Step 5: Insert the hooked end of the SL-3 Rod into the hole in the C-609-1.

Step 6: Insert the SL-3 Rod into the C-615 Spring.

Step 7: Insert the SL-3 Rod into the hole in the F-01487-L Center Section Channel.

Step 8: Install the C-607-1 and C-609-1. Ensure that both parts are able to rotate freely and engage securely with each other.

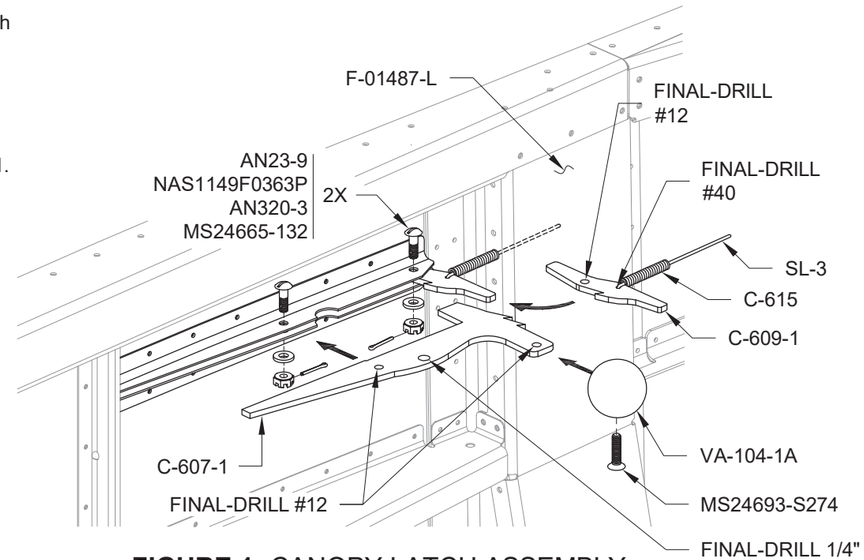

FIGURE 1: CANOPY LATCH ASSEMBLY

NOTE: Perform Steps 9-12 on both sides of the fuselage.

Step 9: Install the C-01429 Latch Bellcrank Angles as shown in Figure 2.

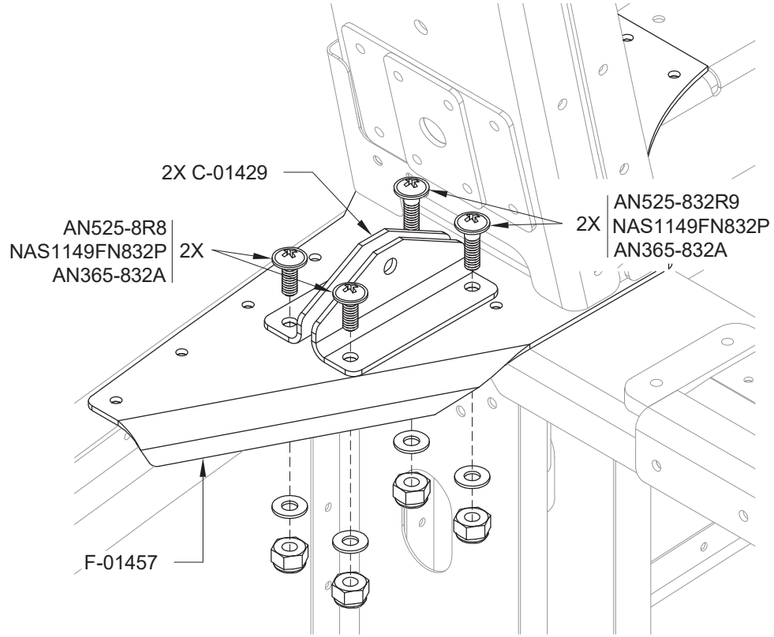

FIGURE 2: LATCH BELLCRANK ANGLE INSTALLATION

Step 10: Final-Drill the C-01438 Canopy Latch Torque Tube as shown in Figure 3.

Step 11: Lightly grease the the ends of the C-01438 Canopy Latch Torque Tube and insert it into the C-01420-L & -R Canopy Latch Torque Tube Blocks as shown in Figure 3.

Step 12: Bolt the C-01420-L & -R Canopy Latch Torque Tube Block to the F-01460-L & -R Intercostals using the hardware called out in Figure 3. Only torque the bolt enough to snugly rest against the plastic. Do not fully torque the bolt.

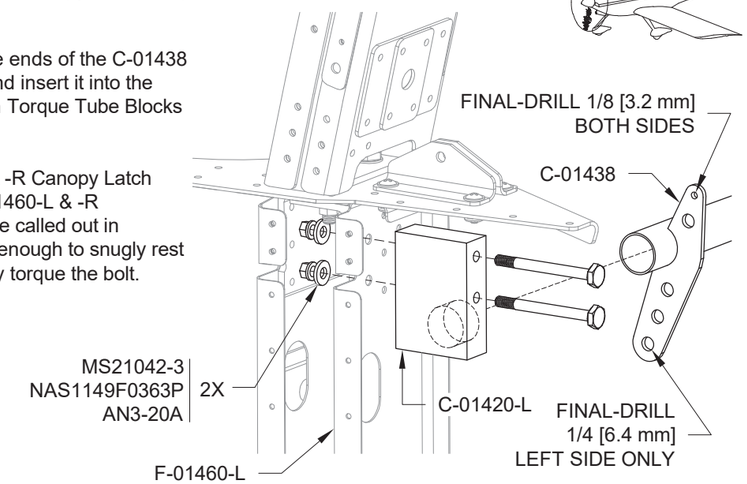

FIGURE 3: CANOPY LATCH TORQUE TUBE INSTALLATION
(LONGERON OMITTED FOR CLARITY)

Step 13: Fabricate the Canopy Latch Pushrod Assembly as shown in Figure 4.

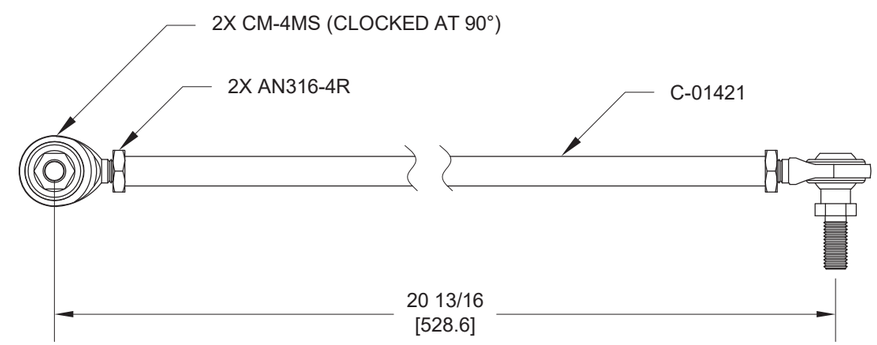

FIGURE 4: CANOPY LATCH PUSHROD ASSEMBLY

NOTE: Perform Steps 1-3 on both sides of the fuselage.

NOTE: For Steps 1-7, refer to Figure 1.

Step 1: Install the C-01430 Latch Bellcrank as shown. Orient the long leg down.

Step 2: Slide the C-01426 Canopy Latch Pin into place.

Step 3: Install the C-01431 Latch Links as shown.

Step 4: Insert the Canopy Latch Pushrod Assembly through the lightening holes in the F-01460-L Intercostal and F-01405D-L Bulkhead Side Channel.

Step 5: Attach the Canopy Latch Pushrod Assembly to the C-01438 Canopy Latch Torque Tube.

Step 6: Attach the Canopy Latch Pushrod Assembly to the C-607-1 Latch Handle.

Step 7: Ensure that both sides of the Canopy Latch System rotate freely and can be secured by locking the Latch Handle.

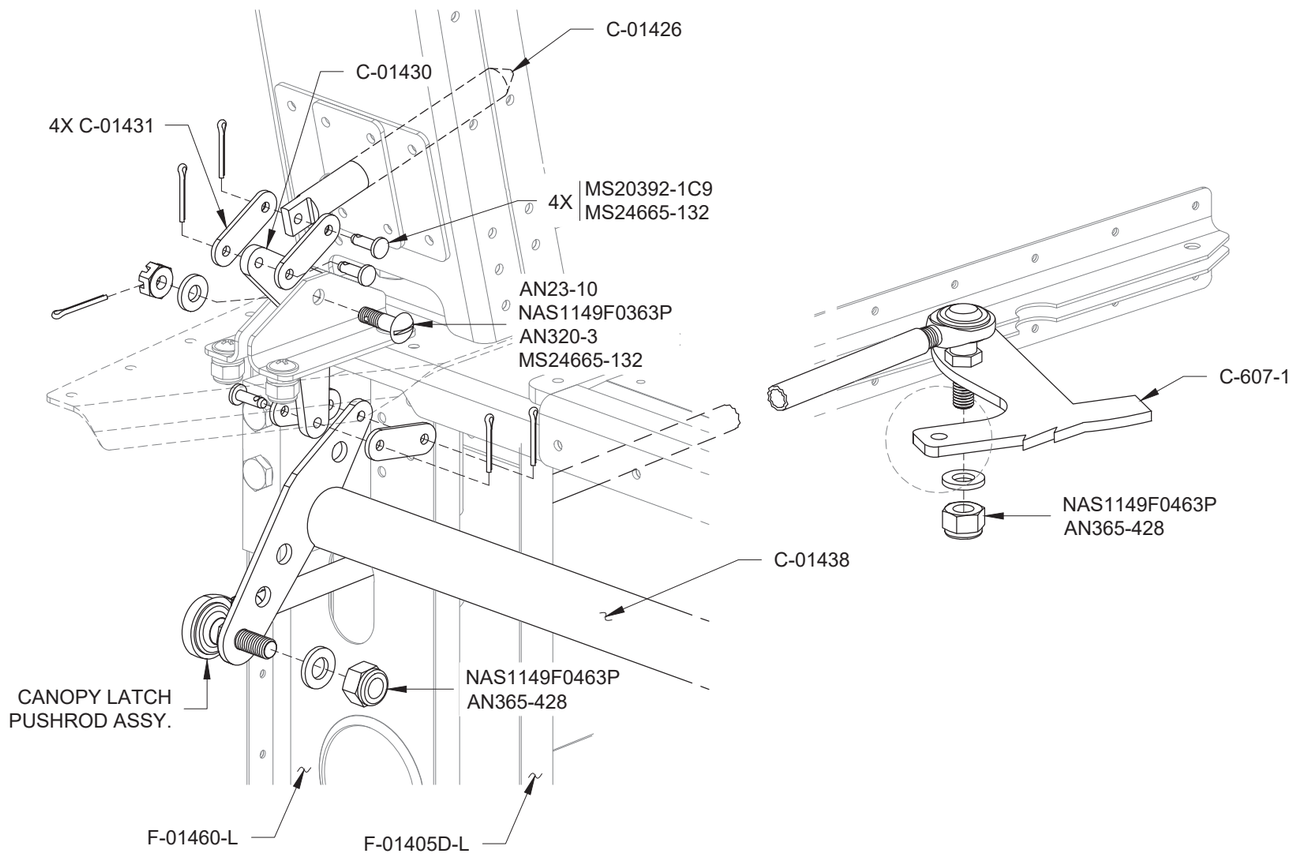

FIGURE 1: CANOPY LATCH SYSTEM

Step 8: Dimple the #40 holes in the top flanges of the two C-01413 Inboard Hinge Intercostals and the two C-01414 Outboard Hinge Intercostals as shown in Figure 2.

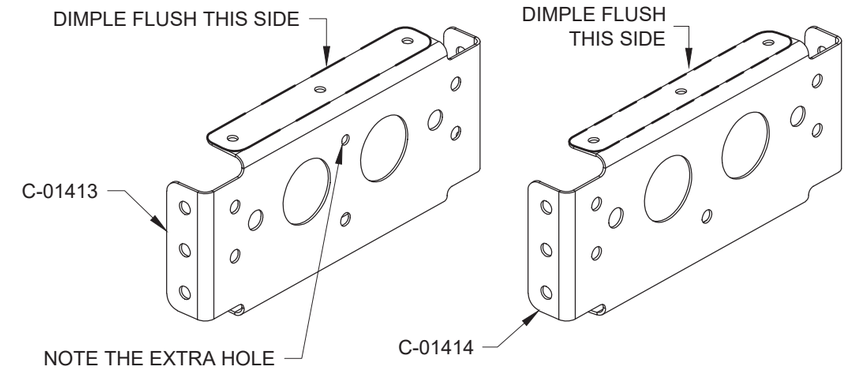

FIGURE 2: HINGE INTERCOSTALS

Step 9: Rivet together the Left and Right Canopy Hinge Assemblies as shown in Figure 3 and Figure 4.

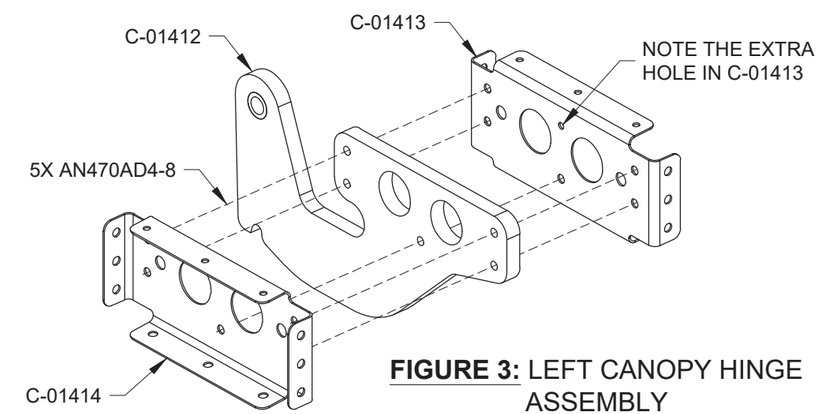

FIGURE 3: LEFT CANOPY HINGE ASSEMBLY

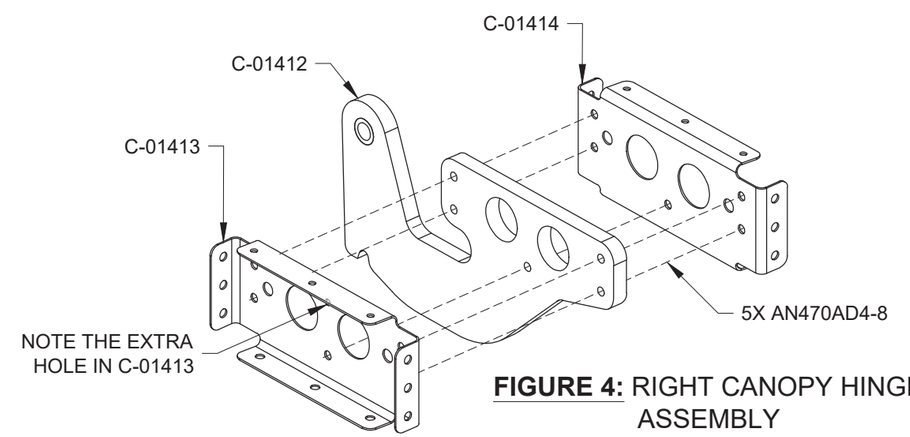

FIGURE 4: RIGHT CANOPY HINGE ASSEMBLY

Step 1: Separate the C-01406 Forward Canopy Rails as shown in Figure 1.

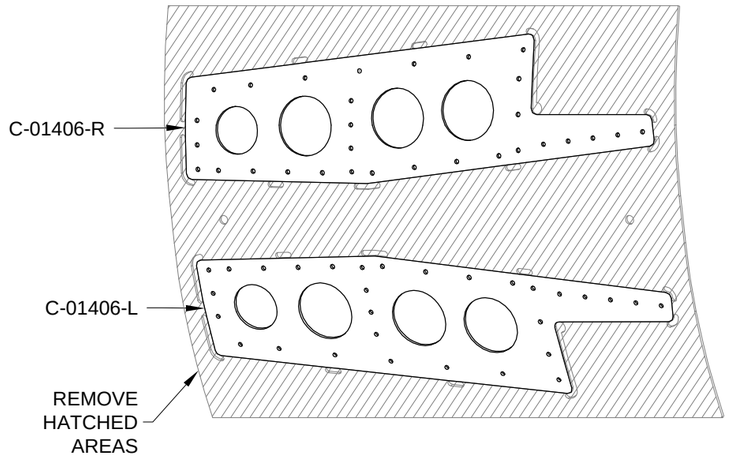

FIGURE 1: SEPARATE FORWARD CANOPY RAILS

Step 2: Separate the C-01404-L & -R Support Flanges and C-01404A Support Flange Splice as shown in Figure 2.

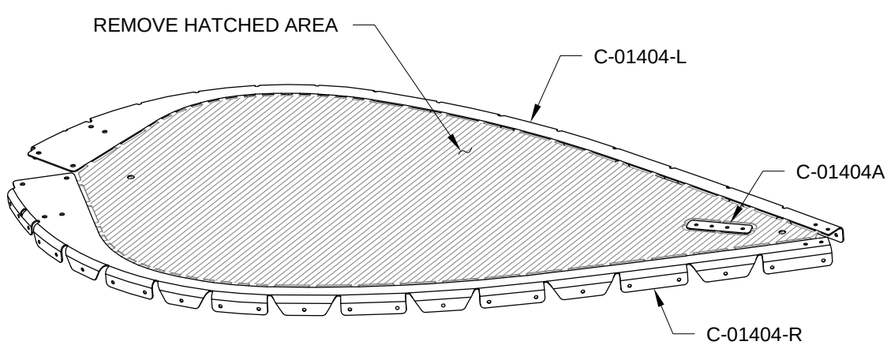

FIGURE 2: SEPARATE SUPPORT FLANGES AND SUPPORT FLANGE SPLICE

NOTE: When deburring the C-01418 Canopy Skin, take care not to obliterate the notches on the forward edge of the skin, they will be used later for reference.

Step 3: Dimple the indicated holes in the C-01418 Canopy Skin. Begin at the center and work outboard symmetrically. See Figure 3.

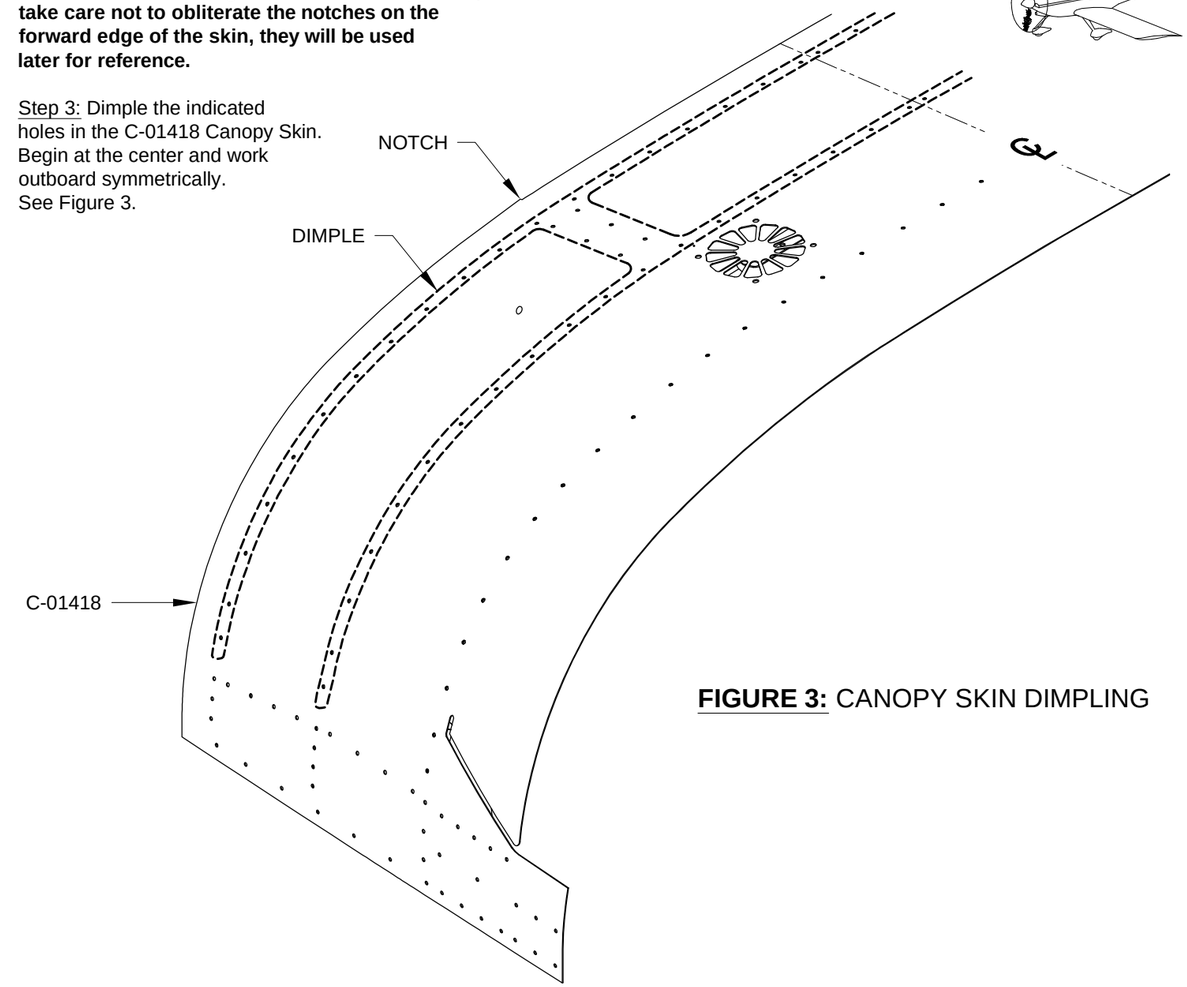

FIGURE 3: CANOPY SKIN DIMPLING

CAUTION: On this and on subsequent pages, follow the Canopy Frame Assembly instructions EXACTLY to prevent frustrating, unpleasant, painful, heart-rending canopy misalignment.

NOTE: The C-01404-L & -R Support Flanges DO NOT require fluting.

Step 1: Dimple holes in the C-01402-L & -R Forward Canopy Frames and the C-01403-L & -R Mid Canopy Frames that correspond with holes in the C-01418 Canopy Skin that were dimpled in Step 3 on the previous page. Do not dimple holes that correspond with the C-01406-L & -R as noted in Figure 1.

Step 2: Flute the flanges of the C-01402-L & -R Forward Canopy Frames and the C-01403-L & -R Mid Canopy Frames as necessary to match up the holes in the flanges with the corresponding holes in the C-01418 Canopy Skin. Fluting will draw the holes closer together. Heavy fluting will be required in areas of tighter curvature. See Figure 1.

Step 3: Cleco together the canopy parts as shown in Figure 1. Start in the center of the canopy skin and work outboard symmetrically. Cleco every other hole.

Step 4: Verify that the flanges of the canopy frames lay flat against the skin when the parts are clecoed together. Uncleco and use a hand seamer to adjust the flange angles as necessary.

If the holes in the skin and canopy frames are not matched sufficiently, the dimpled holes will ride up on top of one another and cause a gap. If necessary, uncleco and make additional flutes in the canopy frames to line up the holes.

Step 5: Uncleco the canopy parts.

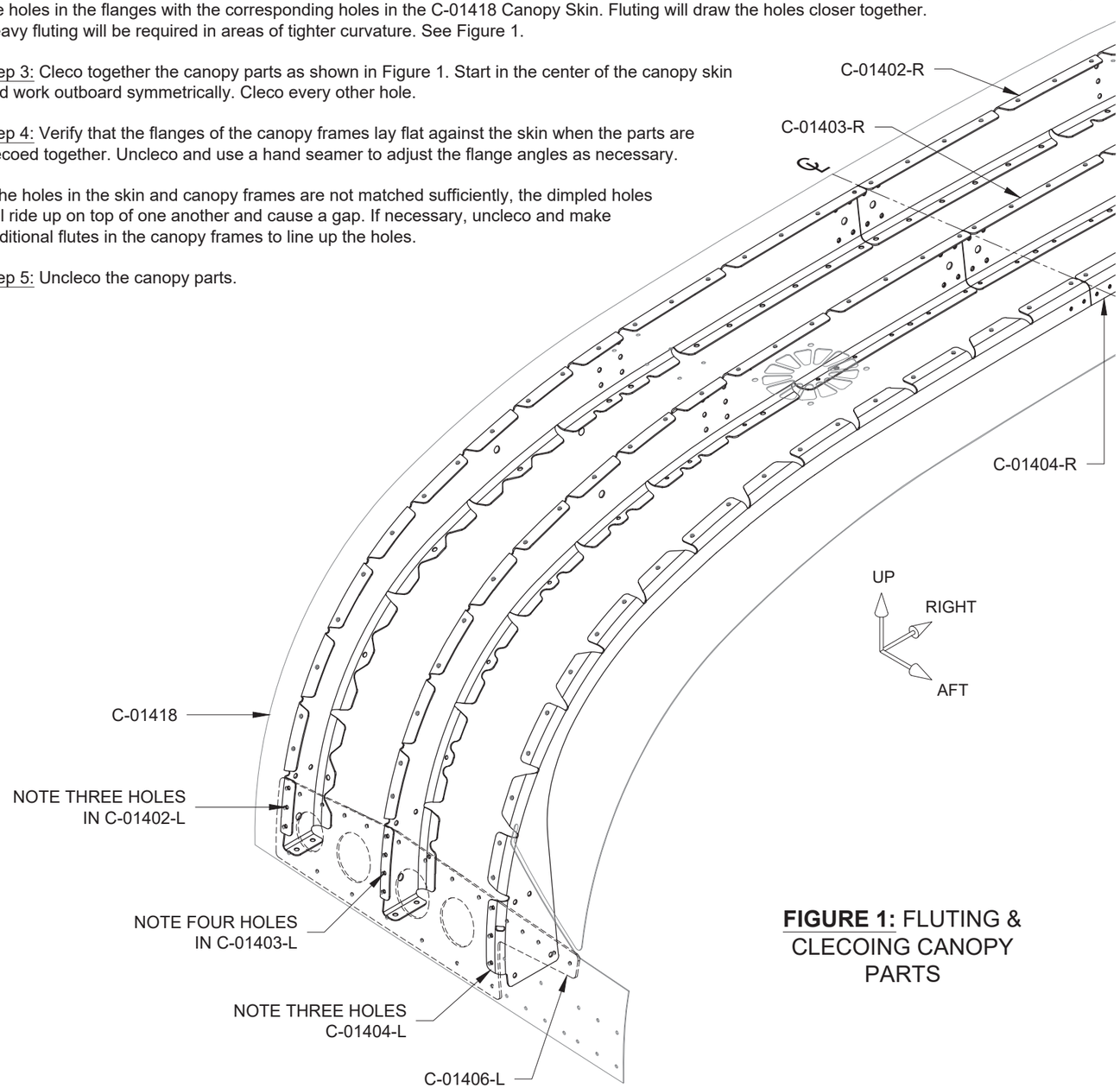

FIGURE 1: FLUTING & CLECOING CANOPY PARTS

Step 6: Separate the C-01408 Forward Canopy Rail Bases as shown in Figure 2.

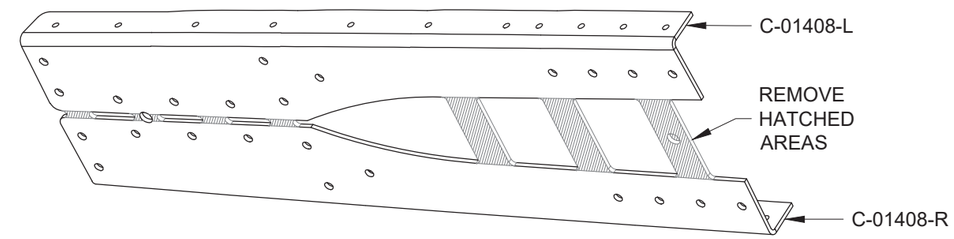

FIGURE 2: FORWARD CANOPY RAIL BASES

Step 7: Separate the C-01428 Canopy Frame Splices as shown in Figure 3.

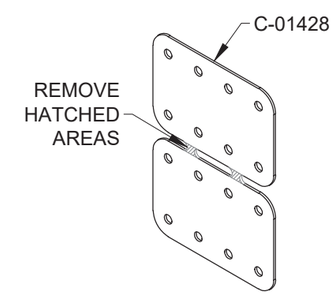

FIGURE 3: CANOPY FRAME SPLICES

NOTE: Perform steps 1-5 on both sides of the canopy.

NOTE: For all steps on this page, refer to Figure 1.

Step 1: Cleco, then rivet the Left Canopy Hinge Assembly to the C-01402-L Forward Canopy Frame.

Step 2: Cleco, then rivet the C-01415-L Forward Intercostal and C-01416-L Aft Intercostal to the C-01403-L Mid Canopy Frame.

Step 3: Cleco, then rivet the Left Canopy Hinge Assembly to the C-01403-L Mid Canopy Frame.

Step 4: Cleco, then rivet the C-01415-L Forward Intercostal to the C-01402-L Forward Canopy Frame.

Step 5: Cleco the C-01408-L Forward Canopy Rail Base to the C-01402-L Forward Canopy Frame and C-01403-L Mid Canopy Frame, then rivet the single outboard hole in each flange as indicated.

These riveted parts will now be referred to as the Left and Right Forward Canopy Frame Assemblies.

Step 6: Cleco the C-01428 Canopy Frame Splices to the Left and Right Forward Canopy Frame Assemblies.

Step 7: Cleco the C-01442A Forward Canopy Fixture and C-01442B Mid Canopy Fixture to the C-01408-L & -R Forward Canopy Rail Bases. Note the direction of the arrows punched into the the C-01442B Mid Canopy Fixture.

Step 8: Cleco the C-01406-L Forward Canopy Rail and C-01418 Canopy Skin onto the Left and Right Forward Canopy Frame Assemblies. Start in the center of the canopy skin and work outboard symmetrically. Cleco every other hole.

Step 9: Double check for adequate fluting (no gap between the flanges and skin) of the C-01402-L & -R Forward Canopy Frames and C-01403-L & -R Mid Canopy Frames, especially in areas with tighter curvature. Adjust as necessary.

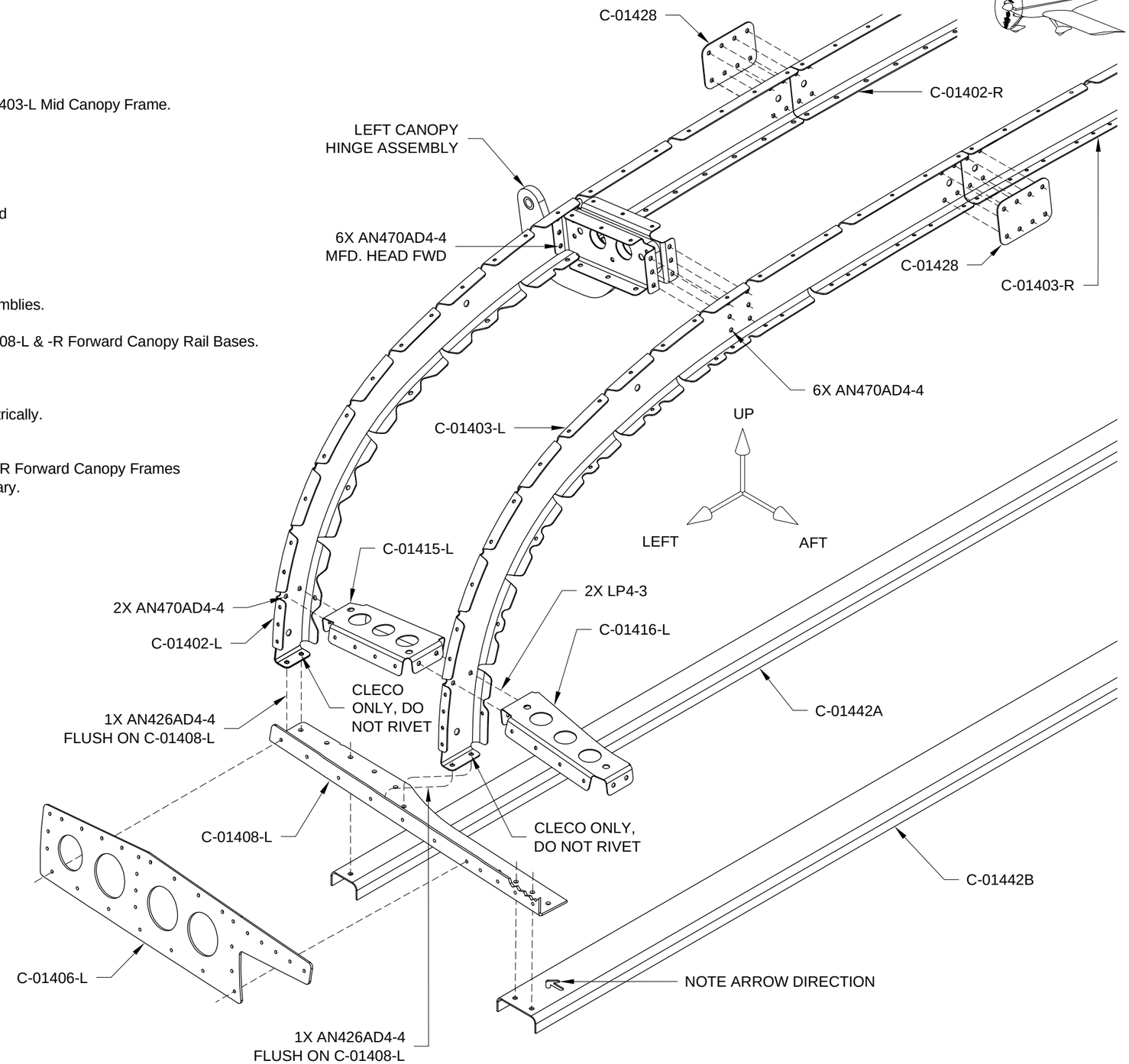

FIGURE 1: LEFT AND RIGHT FORWARD CANOPY FRAME ASSEMBLIES
(CANOPY SKIN OMITTED FOR CLARITY)

NOTE: For Steps 1-7, refer to Figure 1.

Step 1: Dimple the holes in the flanges of the C-01417 Canopy Frame Close-Out.

Step 2: Gently roll a curve into the C-01417 Canopy Frame Close-Out that approximates the curvature of the underside of the Forward Canopy Frame Assemblies. Take care not to kink the canopy frame close-out at the hinge notches.

Step 3: Flip the Canopy Assembly upside down, level and stabilize.

Step 4: Remove the C-01442A Forward Canopy Fixture.

Step 5: Cleco the C-01417 Canopy Frame Close-Out to all of the available holes in the Forward Canopy Frame Assemblies. Holes in the close-out not present in the Forward Canopy Frame Assemblies will be match-drilled later.

Step 6: Cleco the C-01442A Forward Canopy Fixture back into place.

Step 7: With the Canopy Assembly upside down, leveled, and stabilized, use a digital level to check for twist by comparing the angles of the C-01408-L & -R Forward Canopy Rail Bases. If twist is present, twist the Canopy Assembly in the opposite direction as necessary and re-compare the angles.

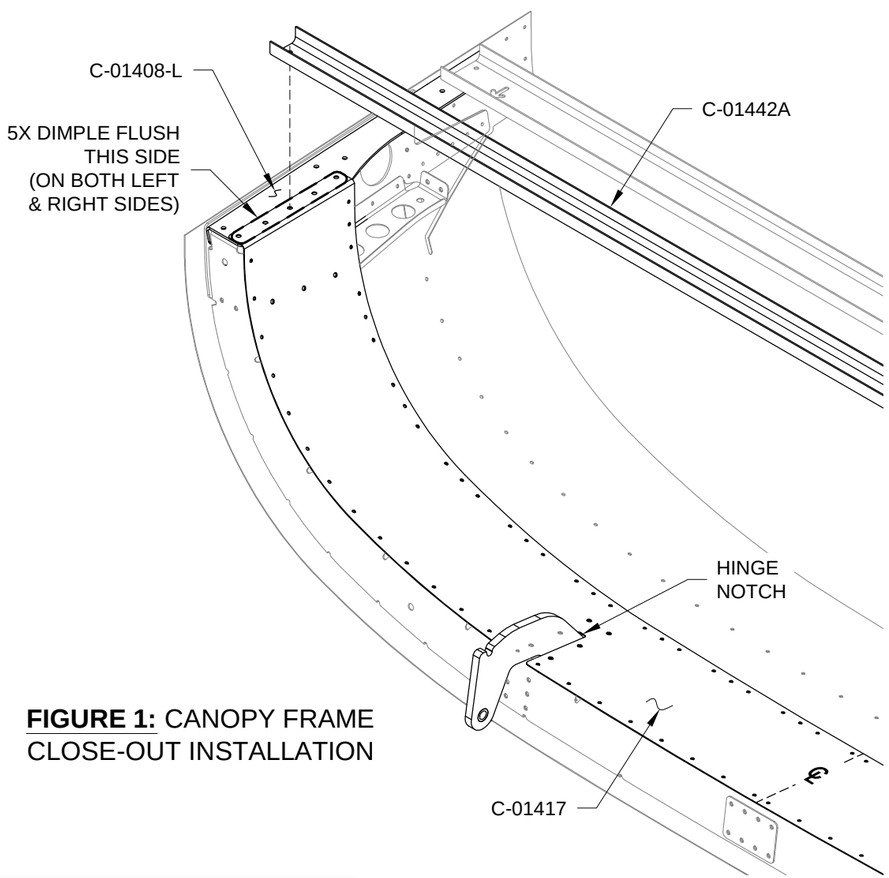

FIGURE 1: CANOPY FRAME CLOSE-OUT INSTALLATION

NOTE: Perform the following steps on both sides of the Forward Canopy Assembly.

Step 8: Final-Drill #40 the holes called-out in Figure 2. Re-cleco each hole as it is drilled.

Step 9: Cleco the C-01404-L & -R Support Flanges to the C-01418 Canopy Skin and C-01416-L & -R Aft Intercostals as shown in Figure 3.

Step 10 Cleco the C-01404A Support Flange Splice to the C-01404-L & -R Support Flanges as shown in Figure 3.

Step 11: Double check the Canopy Assembly for twist and adjust as necessary as described in Step 7.

Step 12: As required, match-drill or final-drill the holes in the C-01417 Canopy Frame Close-Out into the Canopy Assembly as shown in Figure 3. Begin drilling from the centerline and work symmetrically outboard.

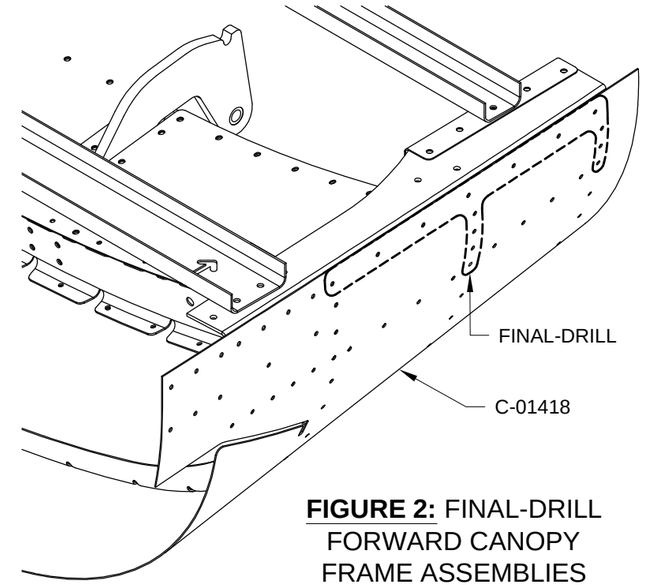

FIGURE 2: FINAL-DRILL FORWARD CANOPY FRAME ASSEMBLIES

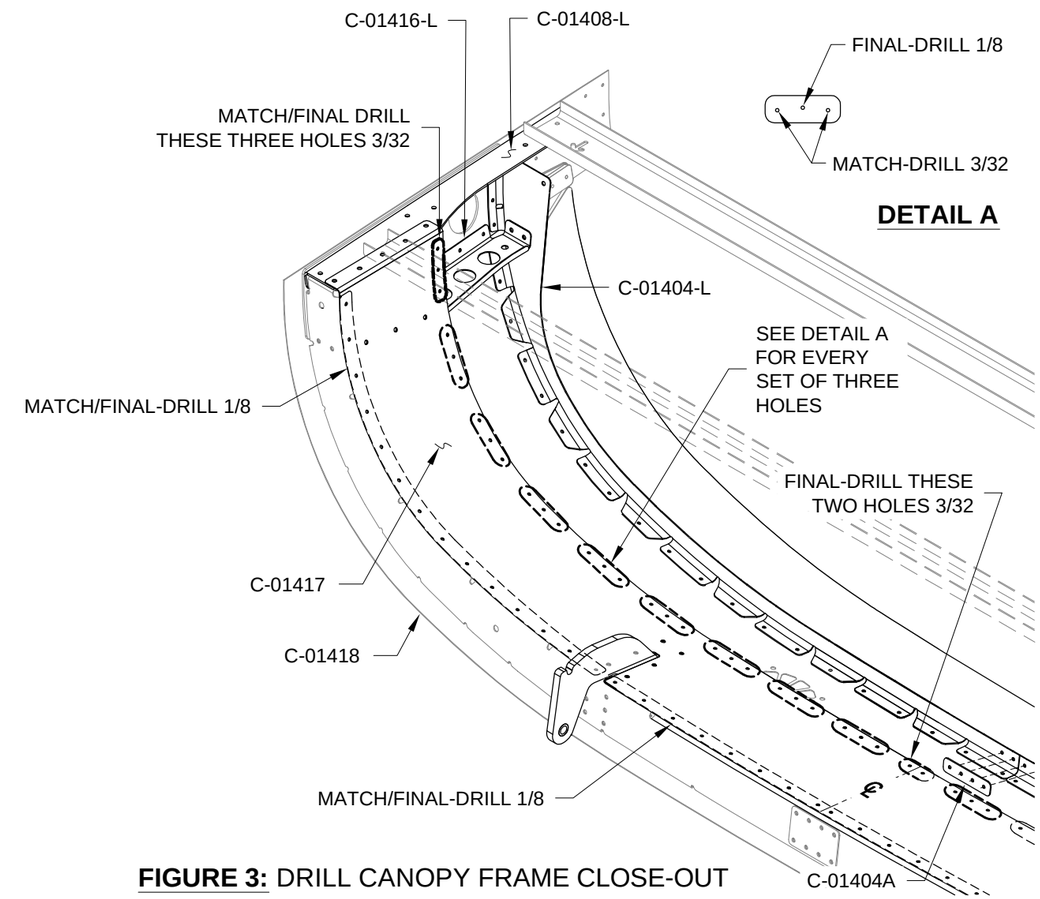

FIGURE 3: DRILL CANOPY FRAME CLOSE-OUT

Step 1: Separate the C-01409-L & -R Aft Canopy Rail Angles as shown in Figure 1.

NOTE: Perform the following steps for both the left and right sides.

Step 2: Use a single cleco to attach the C-01409-L Aft Canopy Rail Angle to the C-01407-L Aft Canopy Rail. See Figure 1 for the single cleco location in the angle, and Figure 2 for the single cleco location in the rail.

Step 3: Mark the locations of the pre-punched holes in the C-01407-L Aft Canopy Rail onto the C-01409-L Aft Canopy Rail Angle. Perfect accuracy is not required, the marks are to help guide fluting in a later step. The angle is bowed down due to the manufacturing process. Rotate the parts about the cleco as required to align the bottom flange of the angle so that it is parallel with the bottom edge of the rail below each pre-punched hole as it is marked. See Figure 2.

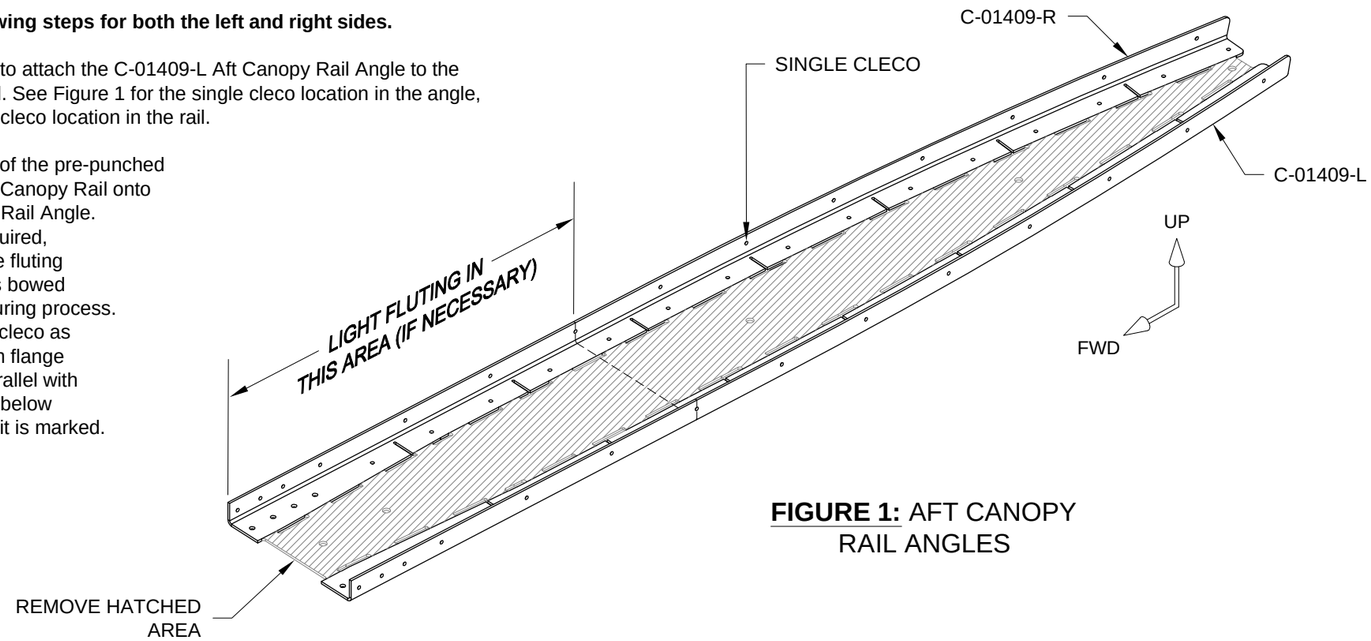

FIGURE 1: AFT CANOPY RAIL ANGLES

Step 6: Machine countersink the aft side of the C-01427-L Aft Canopy Rail Flange as shown in Figure 3.

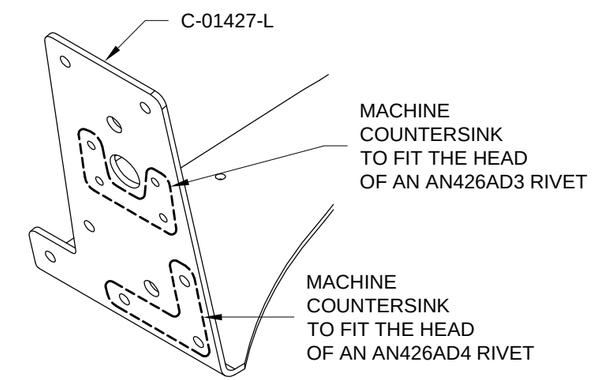

FIGURE 3: MACHINE COUNTERSINK CANOPY RAIL FLANGE

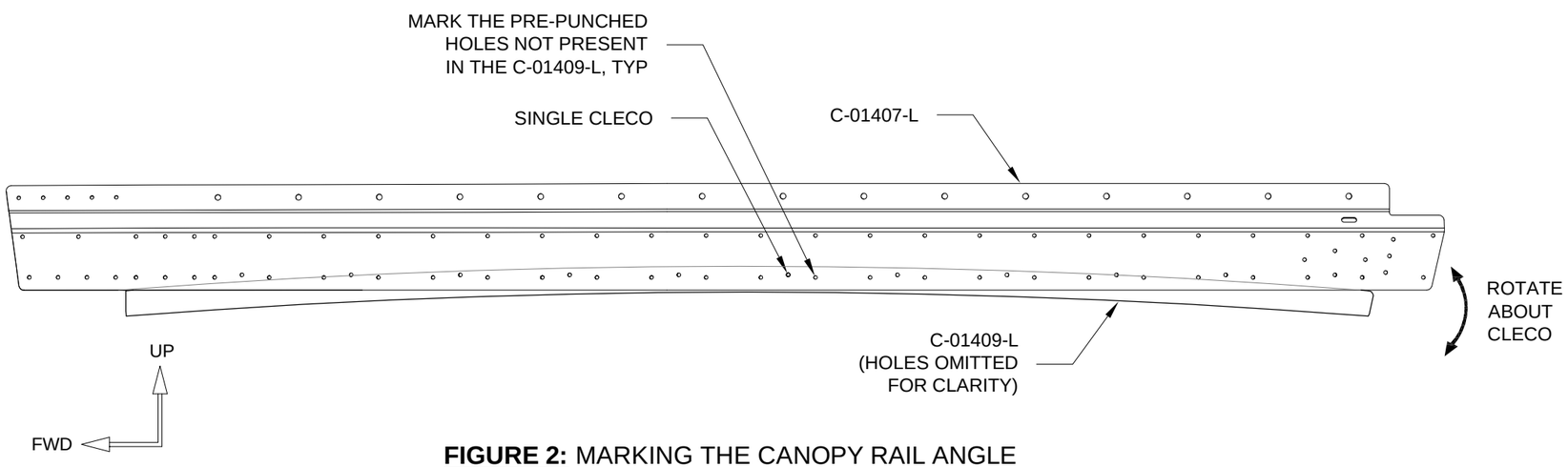

FIGURE 2: MARKING THE CANOPY RAIL ANGLE

Step 4: Uncleco the C-01409-L Aft Canopy Rail Angle.

Step 5: Flute the side flanges of the C-01409-L Aft Canopy Rail Angle as necessary until the bottom flange of the angle can rest flush on a flat surface. Flute between the holes and hole locations marked in Step 3. It is acceptable to flute twice where space allows. Only light fluting (if any) should be necessary in the area called-out in Figure 1.

NOTE: Perform all steps on this page for both the left and right sides.

NOTE: For all steps on this page, refer to Figure 1.

Step 1: Cleco the C-01409-L Aft Canopy Rail Angle to the C-01427-L Aft Canopy Rail Flange.

Step 2: Final-Drill #40 the .094 [2.4 mm] holes common to the C-01409-L Aft Canopy Rail Angle and the C-01427-L Aft Canopy Rail Flange.

Step 3: Match-Drill #40 the two holes in the C-01427-L Aft Canopy Rail Flange into the C-01409-L Aft Canopy Rail as shown.*

Step 4: Machine countersink all of the holes on the bottom of the C-01409 -L Aft Canopy Rail Angle as called out. Although these holes will be filled with dome head rivets, the machine countersinking will minimize the distance the shop heads extend beyond the bottom of the canopy frame. This will assist with canopy sealing later on.

Step 5: Rivet the C-01409-L Aft Canopy Rail Angle to the C-01427-L Aft Canopy Rail Flange as called out. Place the manufactured head of the rivets on the upper side of the C-01427-L Aft Canopy Rail Flange.

Step 6: See Page 38-20, Figure 3 for the position of the aft canopy rail as installed. Use the Roll Bar Assembly as a shaping tool to gently form the C-01407-L Aft Canopy Rail to closely match (within 1/32 [0.8 mm]) the curve of the fuselage aft of the point indicated.

Step 7: Cleco the C-01407-L Aft Canopy Rail to the C-01409-L Aft Canopy Rail Angle. Label or mark these clecos to differentiate them in the next step.

Step 8: Starting at the middle and working forward and aft equally, match-drill #40 and cleco the remaining holes in the C-01407-L Aft Canopy Rail into the C-01409 Aft Canopy Rail Angle. Remove the clecos labeled or marked in the previous step, then final-drill #40.

Step 9: Uncleco the C-01407-L Aft Canopy Rail.

Step 10: Machine countersink the circled holes in the C-01407-L Aft Canopy Rail to fit the head of an AN426AD3 rivet.

Step 11: Cleco the C-01407-L Aft Canopy Rail to the C-01409 Aft Canopy Rail Angle. As clecoing progresses, insert (do not set) rivets into the holes machine countersunk in Step 9 (these holes are circled). These rivets will help to align the aft canopy rail and aft canopy rail angle with greater precision.

Step 12: Set the rivets inserted in the previous step. These parts will now be referred to as the Left and Right Canopy Rail Assemblies.

Step 13: Remove any remaining clecos.

*Refer to Document 38-RF if the holes for mounting the guide pin are not present in the C-01427-L Aft Canopy Rail Flange.

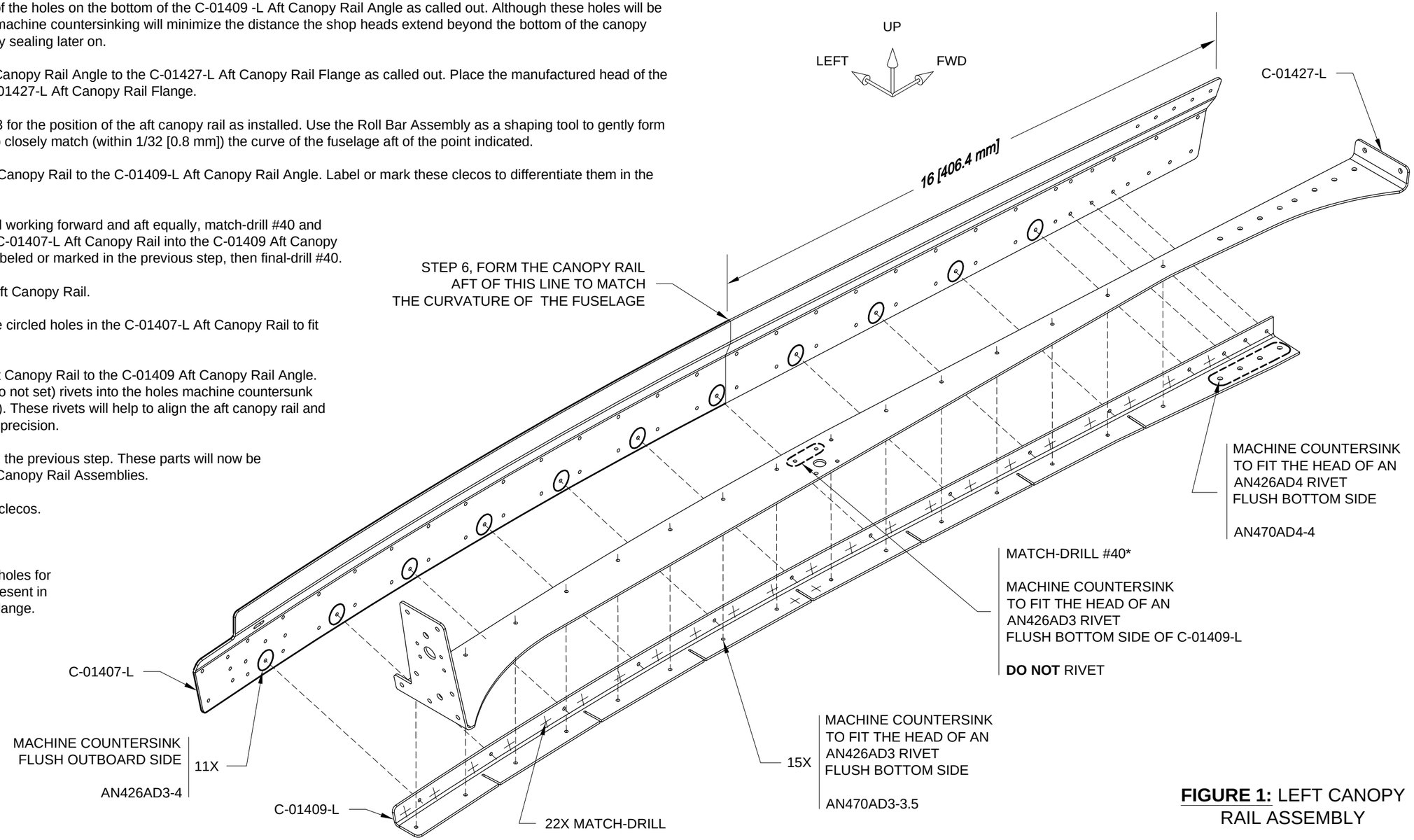

FIGURE 1: LEFT CANOPY RAIL ASSEMBLY

Step 1: Fabricate the C-01437-L & -R Canopy Handles from AA6-063X3/4X3/4 aluminum angle as shown in Figure 1.

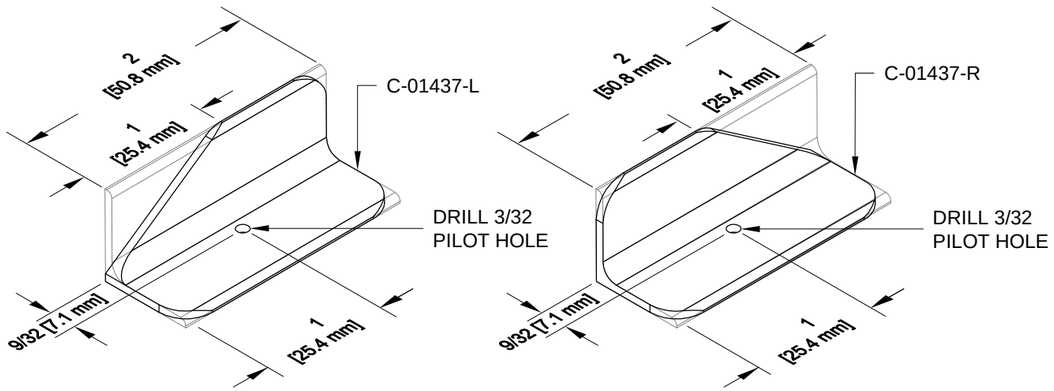

FIGURE 1: CANOPY HANDLES

NOTE: Perform the following steps for both sides of the canopy.

Step 2: Cleco the C-01419-L Canopy Side Skin to the Left Canopy Rail Assembly as shown in Figure 2. Use a cleco in every hole common to the canopy side skin and the Left Canopy Rail Assembly.

Step 3: Use the pilot hole indicated in Figure 2 to cleco the C-01437-L Canopy Handle to the Left Canopy Rail Assembly, then rotate, align, and clamp it into place.

Step 4: Match-Drill #40 the two holes in the Left Canopy Rail Assembly into the canopy handle. Cleco each hole as it is drilled.

Remove the cleco from the pilot hole and final-drill #40.

Step 5: Final-Drill #40 the holes common to the C-01419-L Canopy Side Skin and Left Canopy Rail Assembly. See Figure 2 for exceptions.
Drill from inboard wherever possible.

Only final-drill the open holes common to the C-01419-L Canopy Side Skin and Left Canopy Rail Assembly. If light is not visible through the hole, **DO NOT DRILL!**

Step 6: Remove the C-01419-L Canopy Side Skin.

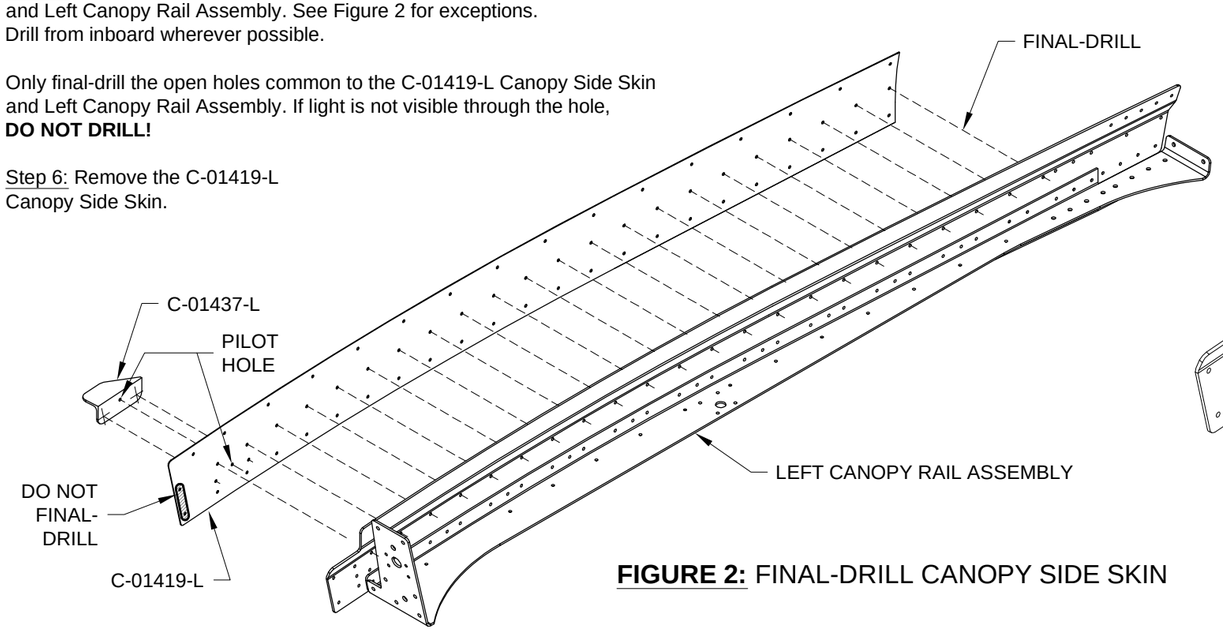

FIGURE 2: FINAL-DRILL CANOPY SIDE SKIN

Step 7: Remove the C-01442B Mid Canopy Fixture from the Canopy Assembly.

Step 8: Slide the Left Canopy Rail Assembly between the C-01406-L Forward Canopy Rail and the C-01408-L Forward Canopy Rail Base as shown in Figure 3, then cleco the Left Canopy Rail Assembly to the Canopy Assembly.

Step 9: Cleco the C-01442A Forward Canopy Fixture and C-01442B Mid Canopy Fixture to the Canopy Assembly as shown on Page 38-09, Figure 1.

Cleco the C-01442C Aft Canopy Fixture to the Canopy Assembly as shown in Figure 3 .

Step 10: Slide the C-01411 Canopy Rail Shim between the C-01406-L Forward Canopy Rail and the Left Canopy Rail Assembly, then cleco into place as shown in Figure 3.

Step 11: Final-Drill #40 the holes in the Canopy Assembly as called out in Figure 3.

Step 12: Disassemble the entire Canopy Assembly.

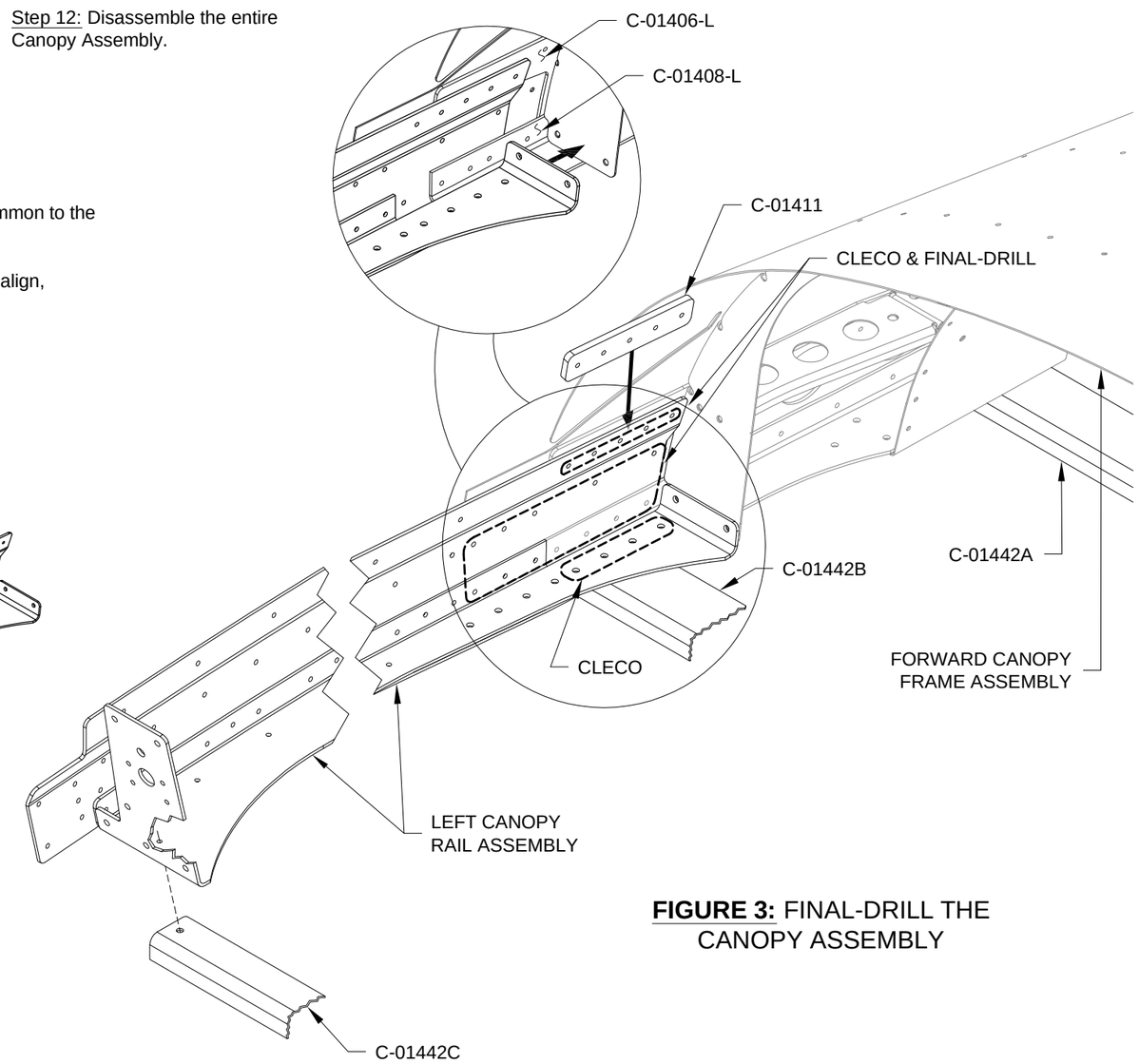

FIGURE 3: FINAL-DRILL THE CANOPY ASSEMBLY

Step 1: Separate the C-01405A Canopy Handle Web and C-01405D Aft Canopy Frame Splice as shown in Figure 1.

Step 2: Mark the centerline on the C-01405D Aft Canopy Frame Splice.

Step 3: Cleco together the Canopy Handle Assembly and rivet where indicated in Figure 2.

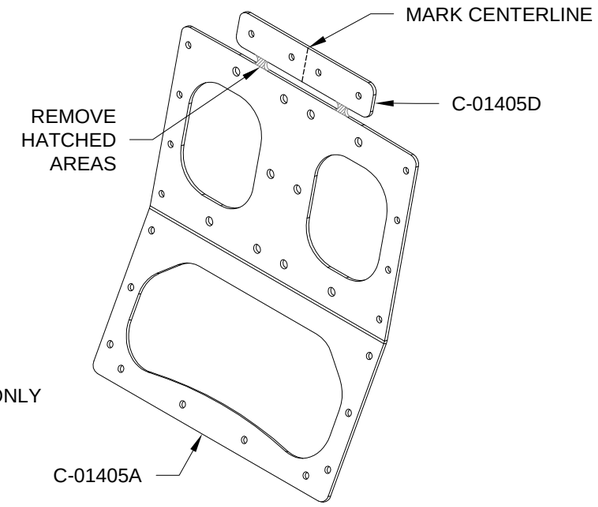

FIGURE 1: CANOPY HANDLE WEB

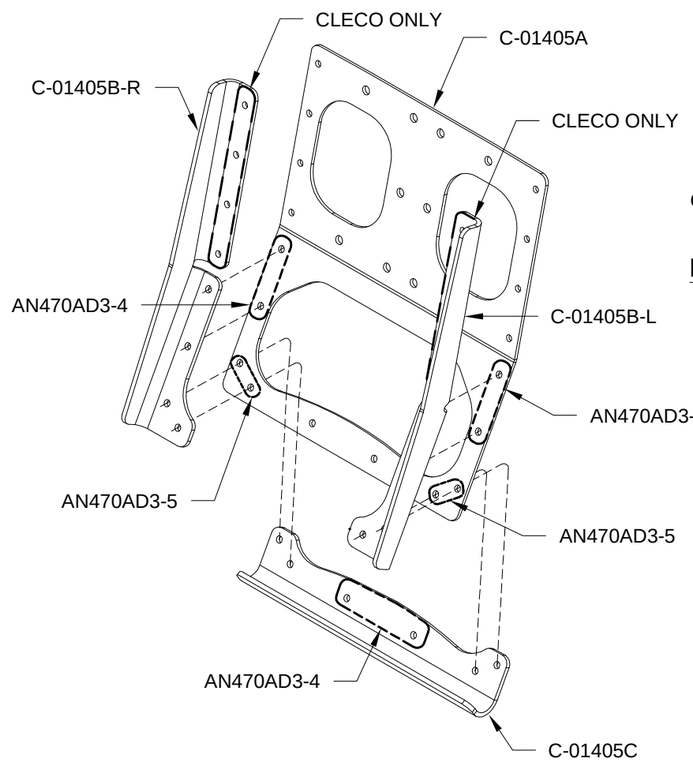

FIGURE 2: CANOPY HANDLE ASSEMBLY

NOTE: For all remaining steps on this page, refer to Figure 3.

Step 4: Cleco and clamp together the Canopy Handle Assembly, C-01442C Aft Canopy Fixture, and the C-01405-L & -R Aft Canopy Frames. Lay the assembly on a flat work table and allow the clamps to hang off the edge. The outboard edges of the canopy frames will touch the table, the inboard edges of the canopy frames will only touch the table where there is a bump out to accommodate the C-01405D Aft Canopy Frame Splice.

Step 5: Final-Drill #40 the indicated .094 [2.4 mm] holes in the Canopy Handle Assembly into the C-01405-L & -R Aft Canopy Frames. Cleco each hole as it is drilled.

Step 6: Final-Drill #30 the indicated .125 [3.2 mm] holes in the Canopy Handle Assembly into the C-01405-L & - R Aft Canopy Frames. Cleco each hole as it is drilled.

Step 7: Remove the Canopy Handle Assembly, deburr the parts, and re-cleco.

Step 8: Rivet the Canopy Handle Assembly to the C-01405-L & -R Aft Canopy Frames using the rivets called out.

From now on, the parts in Figure 3 will be referred to as the Aft Canopy Frame Assembly.

Step 9: As shown in the detail view in Figure 3, align the centerline and edge of the C-01405D Aft Canopy Frame Splice with the centerline and edge of the Aft Canopy Frame Assembly, then clamp into place. Verify that the forward surfaces of the frames are parallel.

Step 10: Match-Drill #40 the holes in the C-01405D Aft Canopy Frame Splice into Aft Canopy Frame Assembly, then final-drill these holes #30.

Step 11: Remove the C-01405D Aft Canopy Frame Splice, deburr, and re-cleco.

Step 12: Rivet the C-01405D Aft Canopy Frame Splice to the Aft Canopy Frame Assembly using the rivets called out.

Step 13: Remove the C-01442C Aft Canopy Fixture from the Aft Canopy Frame Assembly.

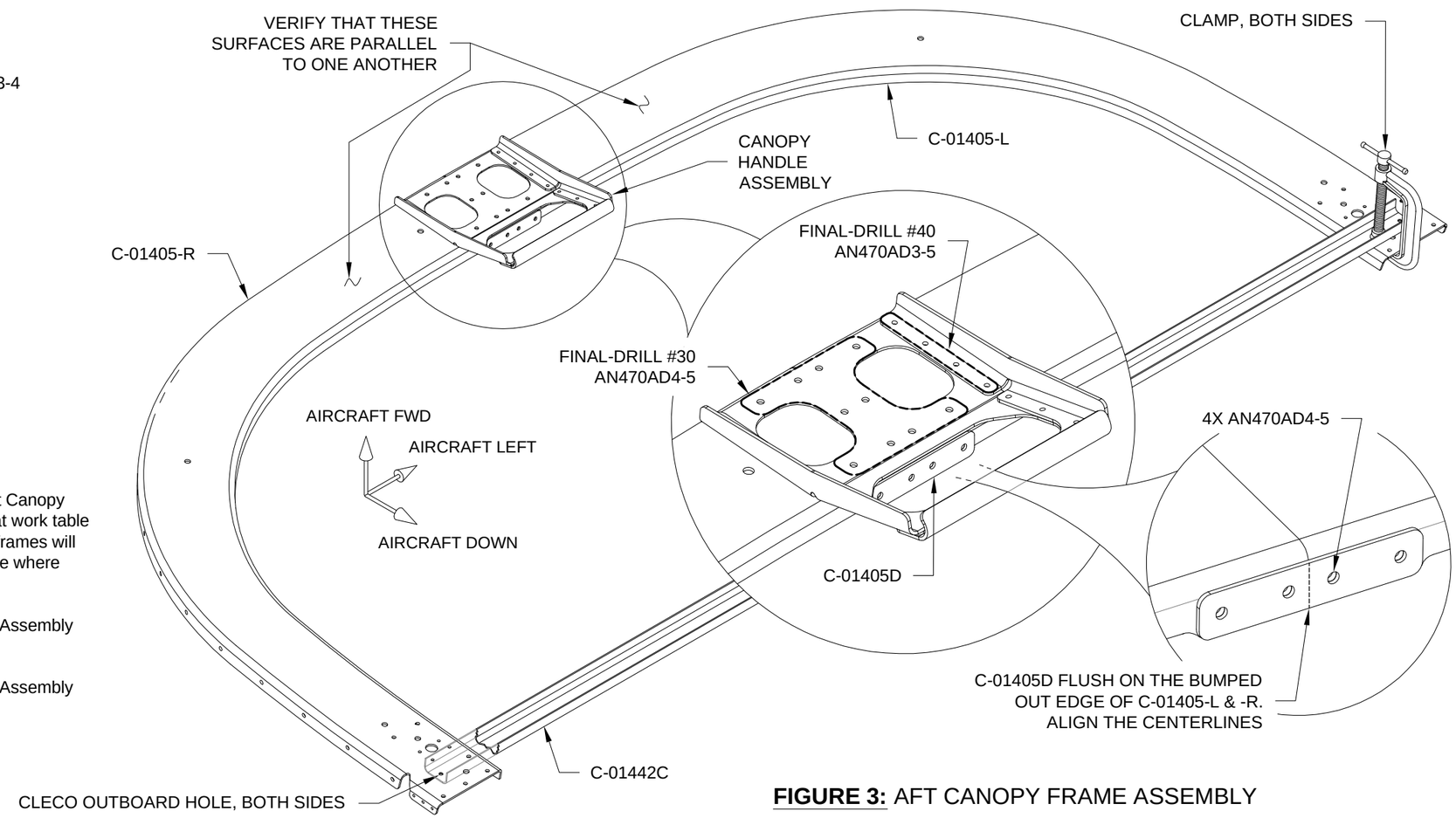

FIGURE 3: AFT CANOPY FRAME ASSEMBLY

NOTE: Perform the following steps for both sides of the canopy

Step 1: Except as indicated, machine countersink the open holes in the Left Canopy Rail Assembly as shown in Figure 1.

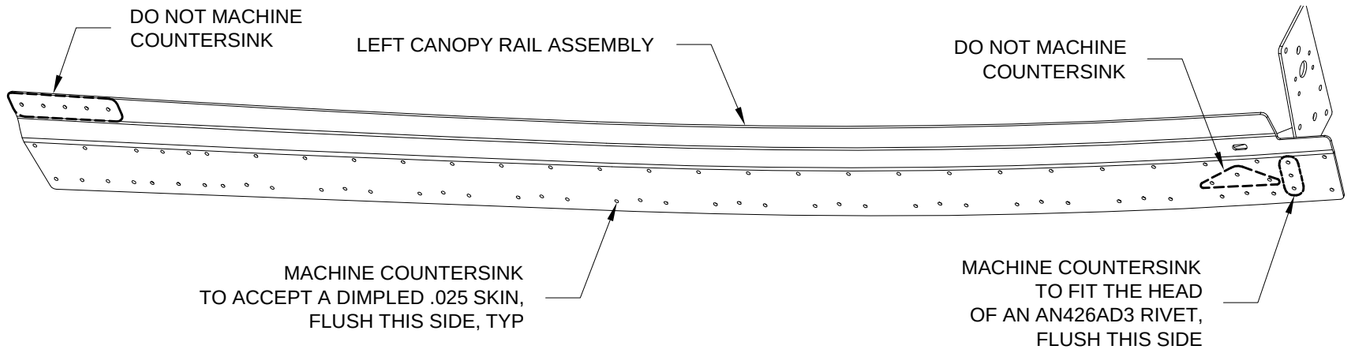

FIGURE 1: MACHINE COUNTERSINK CANOPY RAIL ASSEMBLY

Step 2: Dimple the holes in the C-01419-L Canopy Side Skin except as indicated in Figure 2.

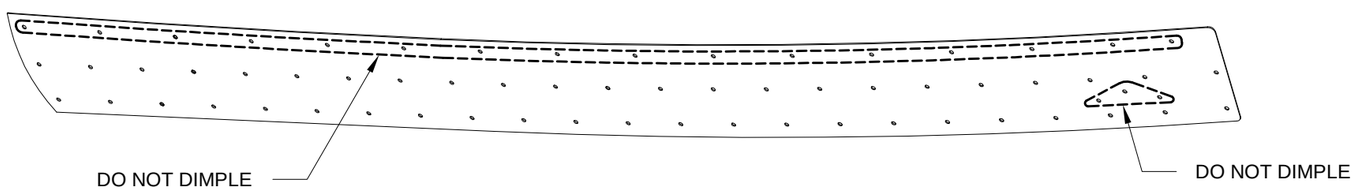

FIGURE 2: DIMPLE CANOPY SIDE SKIN

Step 3: Machine countersink the holes in the C-01437-L Canopy Handle as shown in Figure 3.

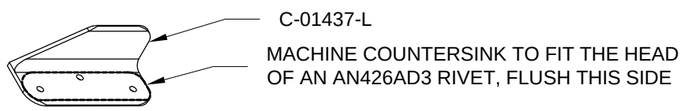

FIGURE 3: MACHINE COUNTERSINK CANOPY HANDLE

Step 4: Machine countersink every hole in the C-01406-L Forward Canopy Rail as shown in Figure 4.

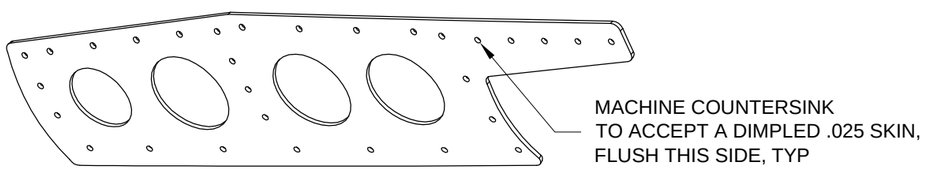

FIGURE 4: FORWARD CANOPY RAIL

Step 5: Dimple the remaining, un-dimpled holes in the C-01418 Canopy Skin, except as indicated in Figure 5.

Step 6: File and sand a radius into the underside of the forward outboard edges of the C-01418 Canopy Skin as shown in Figure 5. This will help the canopy skin to mate properly when the canopy is closed.

Step 7: Except as indicated, dimple all holes in the flanges of the C-01404-L & -R Support Flange as shown in Figure 6.

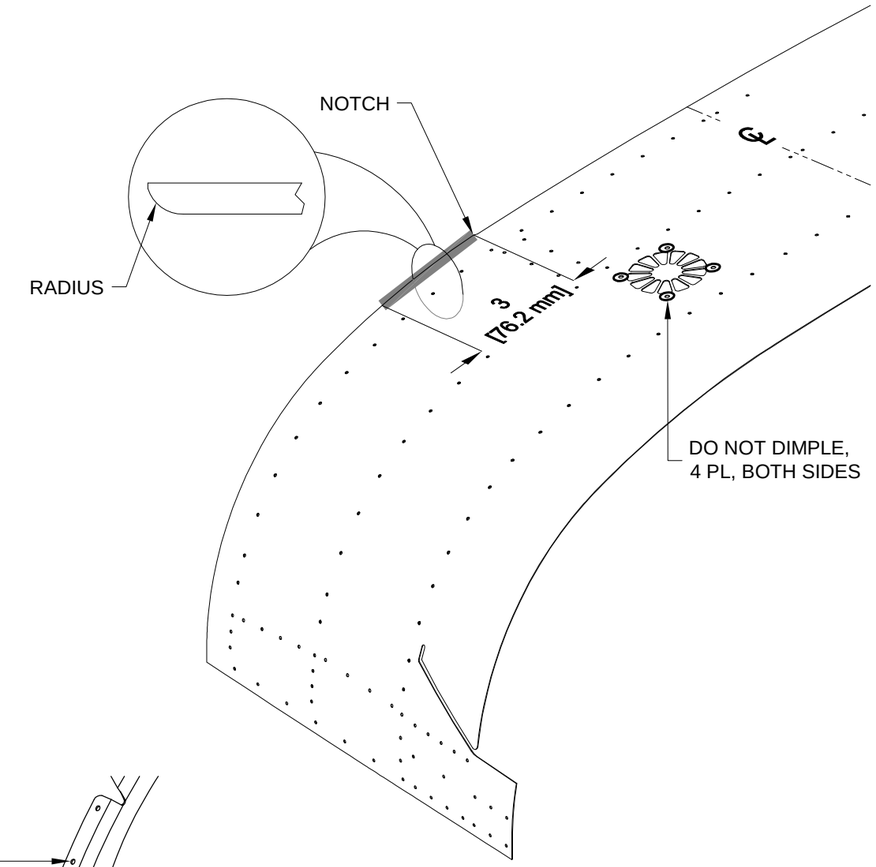

FIGURE 5: CANOPY SKIN

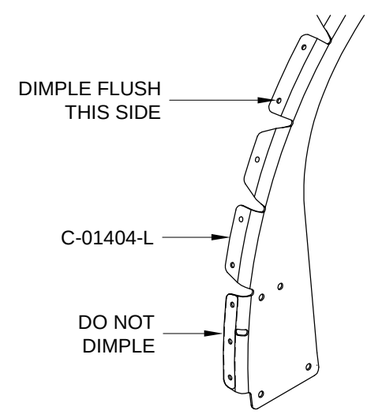

FIGURE 6: SUPPORT FLANGE DIMPLING

NOTE: For all steps on this page, refer to Figure 1.

NOTE: For all clecoing, drilling, or riveting operations on this page, begin from the center (where possible) and work outboard symmetrically.

Step 1: Using the four outboard holes, cleco the C-01428 Splice Plates to the C-01402-L & -R and C-01403-L & -R Canopy Farmes.

Step 2: Cleco the C-01442A Forward Canopy Fixture and C-01442B Mid Canopy Fixture to the Canopy Frame Assemblies as shown on Page 38-09, Figure 1.

Step 3: Cleco the C-01418 Canopy Skin and C-01406-L & -R Forward Canopy Rails to the Canopy Frame Assemblies. Cleco every hole.

Step 4: Machine countersink the four holes in the C-01404A Support Flange Splice, flush on the forward side, to fit the head of an NAS1097AD3 rivet.

Step 5: Cleco the C-01404-L & -R Support Flanges and C-01404A Support Flange Splice to the Canopy Assembly.

Step 6: Rivet the C-01418 Canopy Skin to the C-01402-L & -R Forward Canopy Frames and C-01403-L & -R Mid Canopy Frames.

Step 7: Rivet the Left and Right Canopy Hinge Assemblies to the skin.

Step 8: Except for the holes indicated by the "DO NOT RIVET" call-out, rivet the C-01418 Skin to the C-01406-L & -R Forward Canopy Rails and understructure.

Step 9: Remove the C-01442A Forward Canopy Fixture and C-01442B Mid Canopy Fixture.

Step 10: Machine countersink the C-01408-L & -R Forward Canopy Rail Bases as shown on Page 38-17, Figure 2.

Step 11: Cleco the C-01417 Canopy Frame Close-Out to the Canopy Assembly as shown on Page 38-10, Figure 1. Cleco every hole.

Step 12: Cleco the C-01442A Forward Canopy Fixture and C-01442B Mid Canopy Fixture to only one side of the Canopy Assembly. Gently flex the Canopy Assembly until the holes in the fixtures align with the corresponding holes in the Canopy Assembly, and can be clecoed with no sideways force.

Step 13: Finish clecoing the C-01442A Forward Canopy Fixture and C-01442B Mid Canopy Fixture to the Canopy Assembly.

Step 14: Final-Drill #30 the holes common to the C-01428 Canopy Frame Splices and to the C-01402-L & -R and C-01403-L & -R Canopy Frames. Cleco every hole as it is drilled.

Step 15: Rivet the C-01428 Canopy Frame Splices to the C-01402-L & -R and C-01403-L & -R Canopy Frames. Remove one cleco at a time while riveting.

Step 16: Rivet the C-01404-L & -R Support Flanges to the Canopy Assembly.

Step 17: Rivet the C-01404A Support Flange Splice to the C-01404-L &-R Support Flanges. For aesthetic purposes, position the flush manufactured head on the splice and use a domed rivet set on the shop head.

Step 18: Rivet the C-01404-L & -R Support Flanges to the aft flange of the C-01416-L & -R Aft Intercostals.

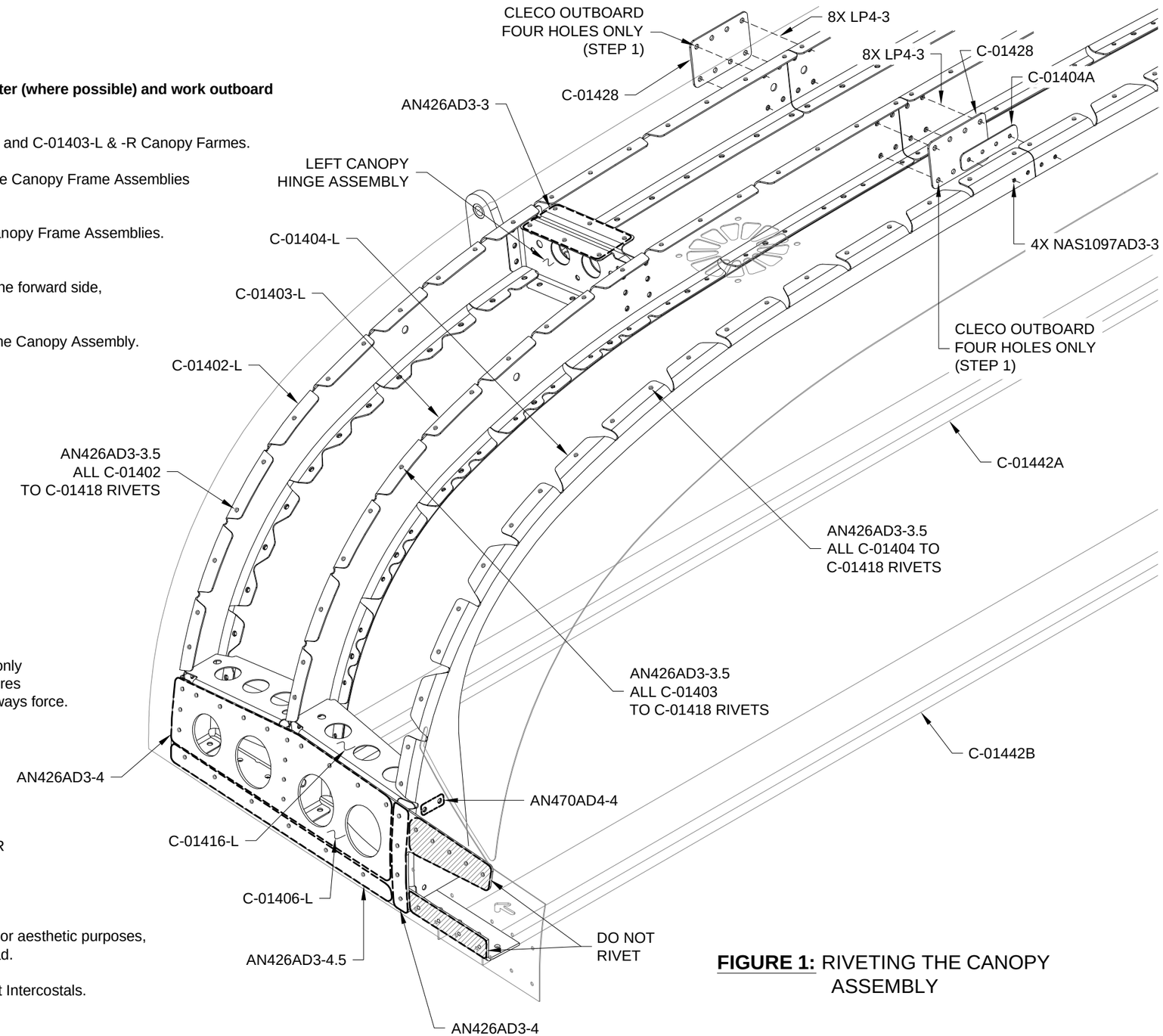

FIGURE 1: RIVETING THE CANOPY ASSEMBLY

NOTE: All steps on this page refer to the C-01417 Canopy Frame Close-Out and the understructure of the Canopy Frame Assembly.

NOTE: For all steps on this page, refer to Figure 1.

Step 1: Check for twist as decribed on page 38-10, Step 7.

Step 2: Final-Drill #30 the row of 1/8 holes indicated by the "STEP 2" call-out. Install a cleco in each hole as it is drilled.

NOTE: A twisted Canopy Frame will cause endless frustration. Check for twist as described on page 38-10, Step 7 after installing every fourth rivet called-out on this page.

Step 3: Rivet the #30 holes drilled in Step 2 and indicated by the "STEP 3" call-out. Begin riveting from the center and work outboard symmetrically.

Step 4: Except for the individual, circled holes indicated by the "STEP 4" call-out, final-drill #30 the 1/8 holes common to the C-01415-L & -R Forward Intercostals, Left and Right Canopy Hinge Assemblies, and C-01402-L & R Forward Canopy Frames.

Install a cleco in each hole as it is drilled.

Un-cleco the C-01442A Forward Canopy Fixture as necessary to gain access for final-drilling, then re-cleco.

Step 5: Rivet all #30 holes final-drilled in Step 4 as indicated by the "STEP 5" call-out.

The 1/8 holes not final-drilled in Step 4 will be left open and used later to secure wiring.

Step 6: Final-Drill #40 every 3/32 hole along the aft edge of the C-01417 Canopy Frame Close-Out as indicated by the "STEP 6" call-out.

Step 7: Rivet all the #40 holes drilled in Step 6 as indicated by the "STEP 7" call-out. Begin riveting from the center and work outboard symmetrically.

Step 8: Rivet the flanges as indicated by the "STEP 8" call-outs.

Step 9: Remove the C-01442A Forward Canopy Fixture.

Step 10: Rivet the remaining holes in the flanges as indicated by the "STEP 10" call-out.

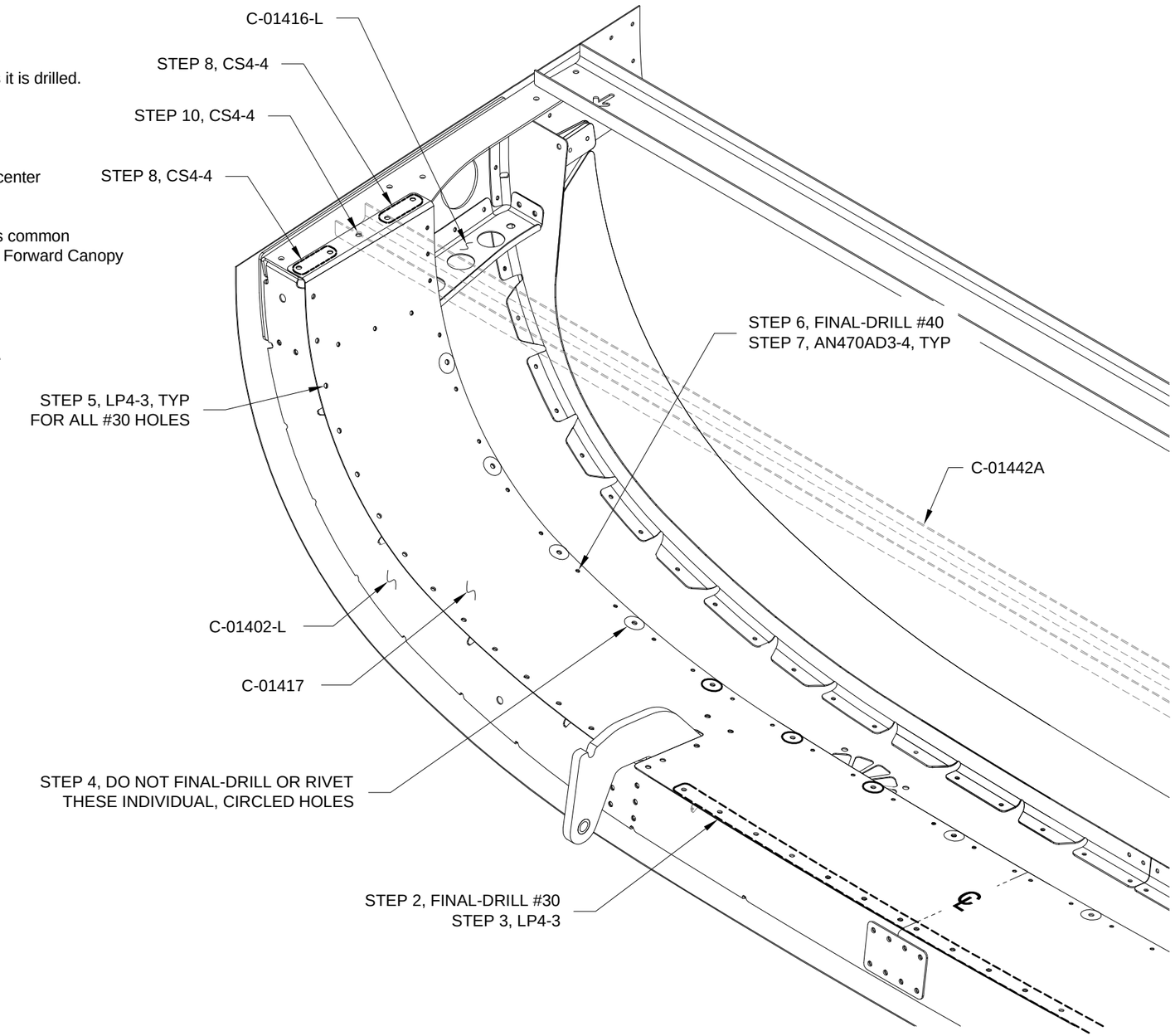

FIGURE 1: CANOPY FRAME CLOSE-OUT

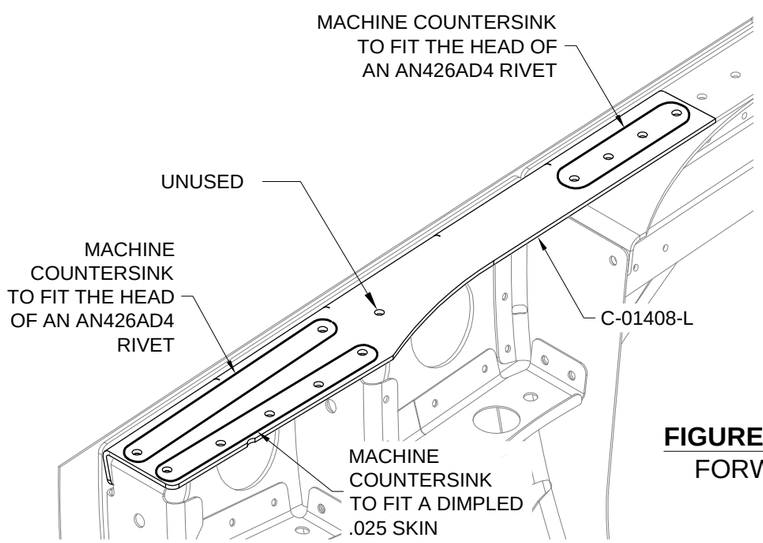

FIGURE 2: MACHINE COUNTERSINK FORWARD CANOPY RAIL BASE

NOTE: For all steps on this page, refer to Figure 1 and Detail A.

Step 1: Cleco the Left and Right Canopy Rail Assemblies and the C-01411 Canopy Rail Shims to the Canopy Assembly, then cleco the C-01442C Aft Canopy Fixture in place. Leave the Aft Canopy Frame Assembly off for now.

Step 2: Rivet the Left and Right Canopy Rail Assemblies and C-01411 Canopy Rail Shims to the Canopy Assembly. Remove the C-01442B Mid Canopy Fixture last for access to the final rivet holes.

Step 3: Cleco, then rivet the Aft Canopy Frame Assembly to the Canopy Assembly.

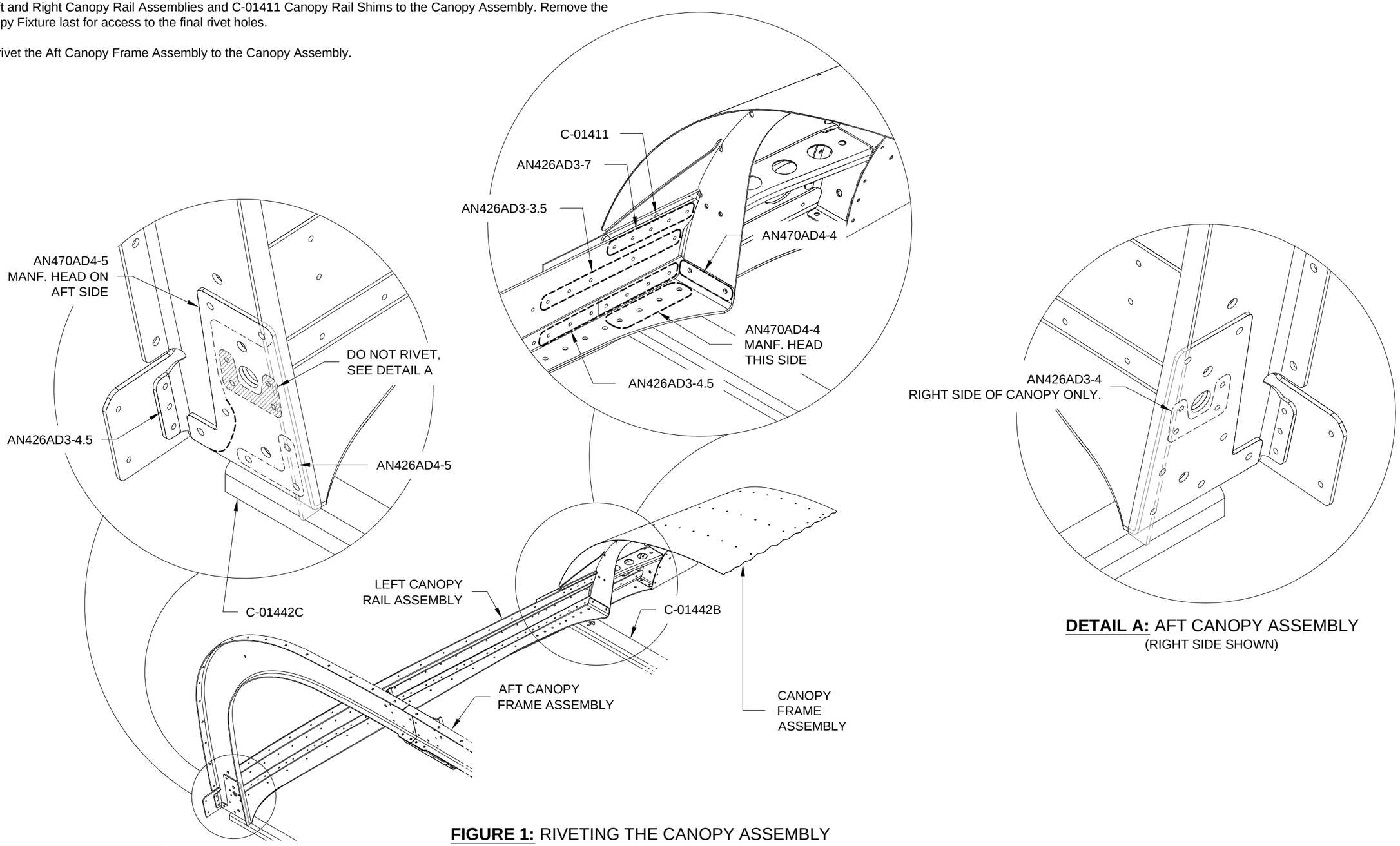

DETAIL A: AFT CANOPY ASSEMBLY
(RIGHT SIDE SHOWN)

FIGURE 1: RIVETING THE CANOPY ASSEMBLY

Step 1: Machine countersink the holes in the C-01424 Canopy Pin Blocks as shown in Figure 1.

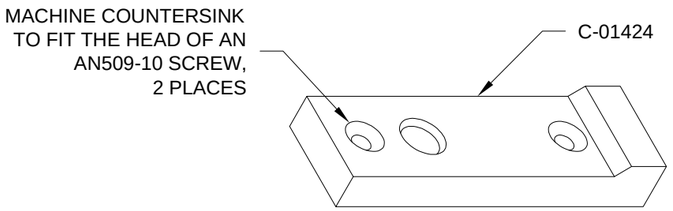

FIGURE 1: CANOPY PIN BLOCK

Step 2: Label and separate the C-01445-L & -R Switch Brackets as shown in Figure 2.

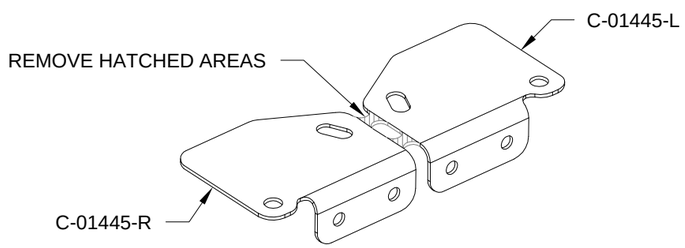

FIGURE 2: SWITCH BRACKETS

Step 3: Rivet the C-01445-L & -R Switch Brackets to the Canopy Frame Assembly as shown in Figure 3.

Step 4: Install the C-01424 Canopy Pin Blocks as shown in Figure 3.

Step 5: Cleco the C-01437-L & -R Canopy Handles to the Forward Canopy Frame Assembly as shown in Figure 3.

Step 6: Cut four C-01441 Canopy Frame Alignment Blocks from the part provided. See Figure 4.

Step 7: Tape the C-01441 Canopy Frame Alignment Blocks to the Canopy Frame Assembly approximately as shown in Figure 5.

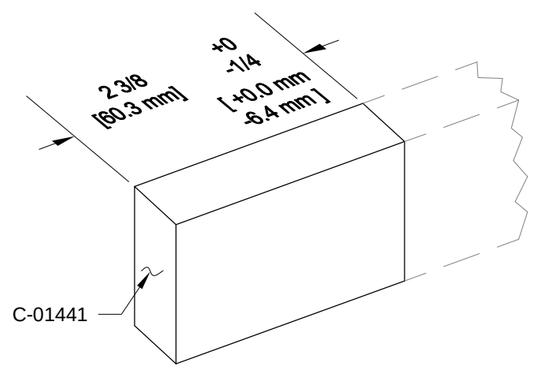

FIGURE 4: CANOPY FRAME ALIGNMENT BLOCK

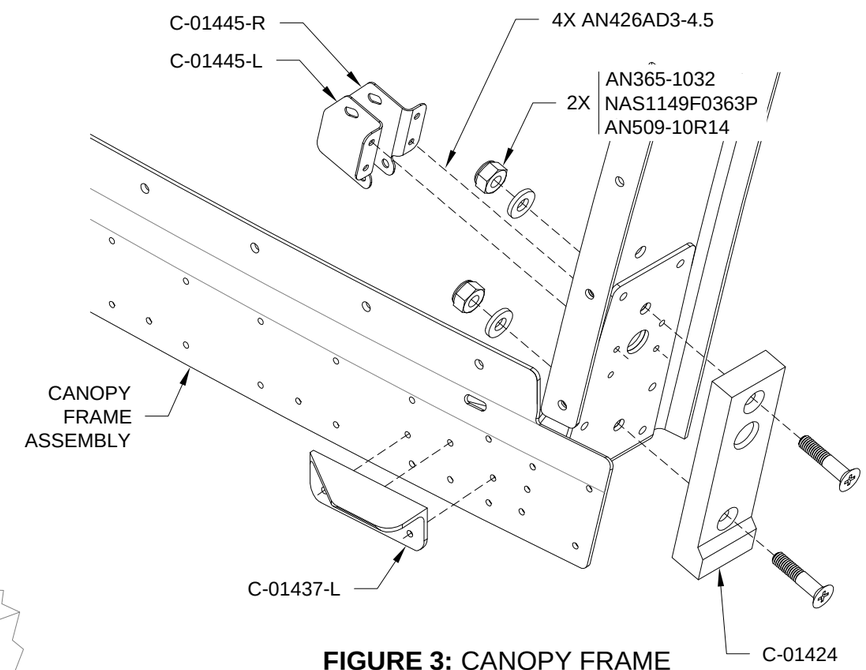

FIGURE 3: CANOPY FRAME ASSEMBLY DETAILS, AFT

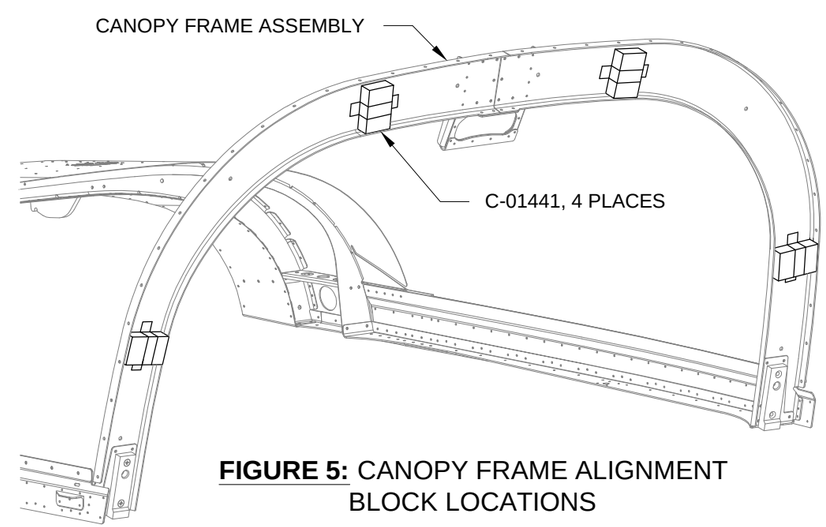

FIGURE 5: CANOPY FRAME ALIGNMENT BLOCK LOCATIONS

Step 1: Install the C-01444 Canopy Jettison Handle through the Instrument Panel, F-01455 Sub Panel then connect it to the WD-618-1 Canopy Release Assembly as shown in Figure 1.

A snap bushing has been provided for the instrument panel (not provided in the kit). See the instrument panel data set drawing on the downloads page of the Van's Aircraft web site for the location of the hole for the handle in the panel.

Step 2: Pull the canopy jettison handle to retract the canopy hinge pins.

Step 3: Lift the Canopy Assembly over the fuselage and rest the notches of the canopy hinges on the pins in the C-01439 Canopy Cradle Assemblies as shown in Figure 2.

Step 4: Rotate the Canopy Assembly up and forward to align the holes in the canopy hinges with the hinge pins. Push the temporary canopy jettison handle to engage the canopy hinge pins.

CAUTION: DO NOT LOWER THE CANOPY YET!

If the canopy is allowed to close before Step 5 has been completed, the canopy top skin can bind underneath the forward top skin and bend irreparably if forced open.

Step 5: Slowly and gently close the canopy while checking for interference between the forward edge of the C-01418 Canopy Skin and the aft edge of the F-01471 Forward Top Skin.

If interference seems likely as the canopy closes, open the canopy and file as necessary to provide clearance. See Figure 4.

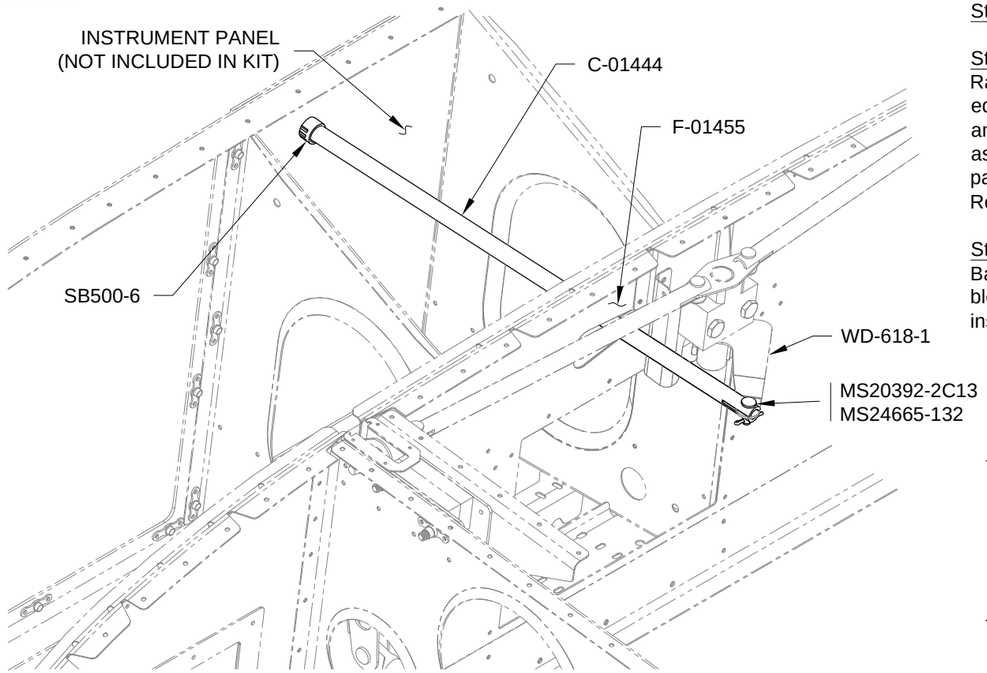

Step 6: Close and latch the canopy.

Step 7: Close to the middle of the Left Canopy Rail Assembly, insert a shim between the inboard edge of the C-01427-L Aft Canopy Rail Flange and the F-01421B-L Aft Canopy Deck to twist the assembly until the C-01407-L Aft Canopy Rail is parallel to the F-01470-L Side Skin. See Figure 3. Repeat for the right side.

Step 8: Clamp the Aft Canopy Frame to the Roll Bar where the C-01441 Canopy Frame Alignment blocks are present. Position the clamps on the inside of the Roll Bar.

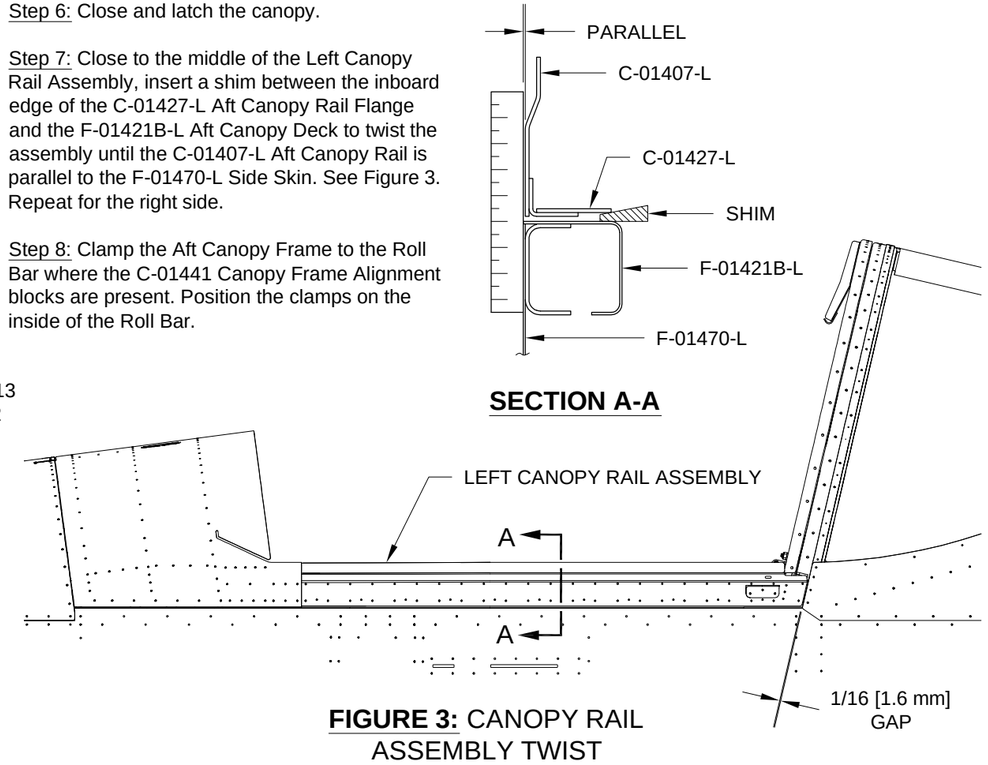

FIGURE 3: CANOPY RAIL ASSEMBLY TWIST

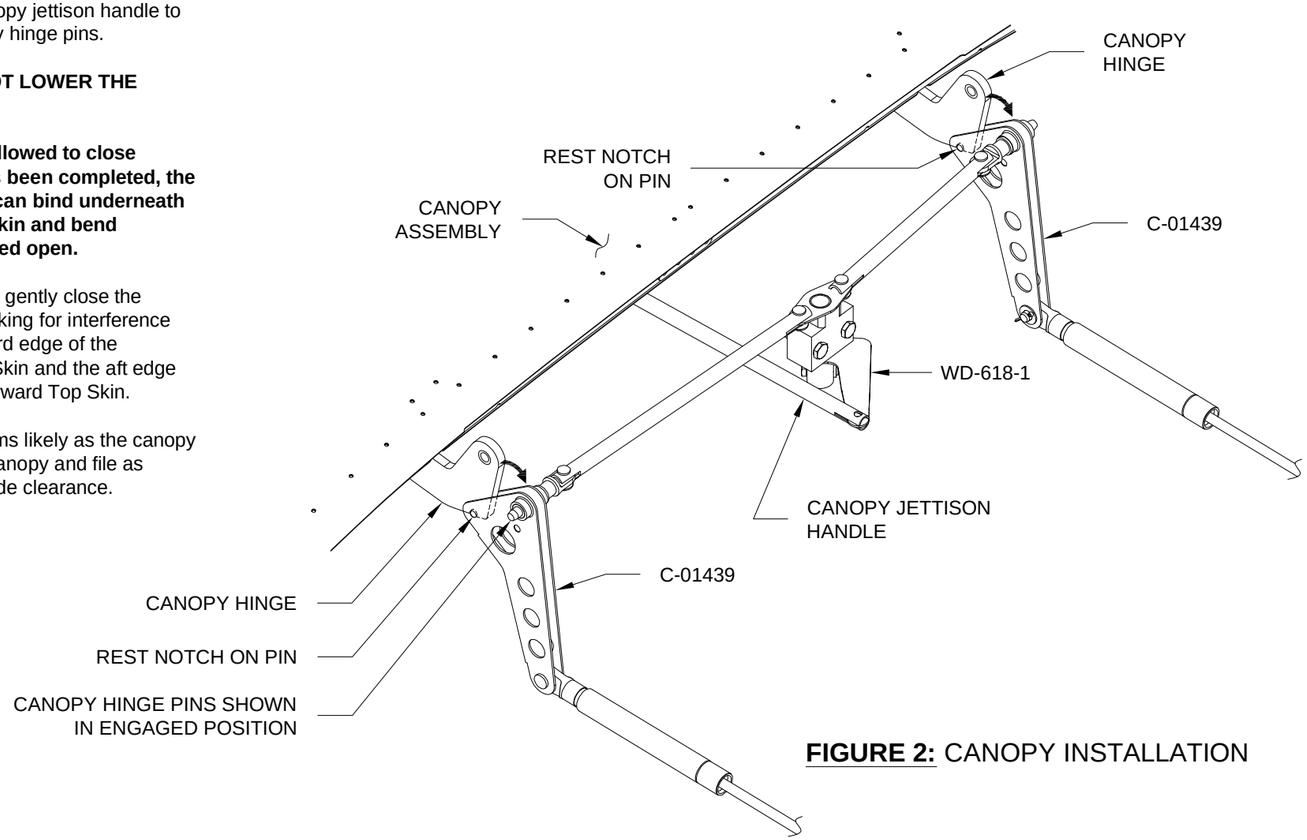

FIGURE 2: CANOPY INSTALLATION

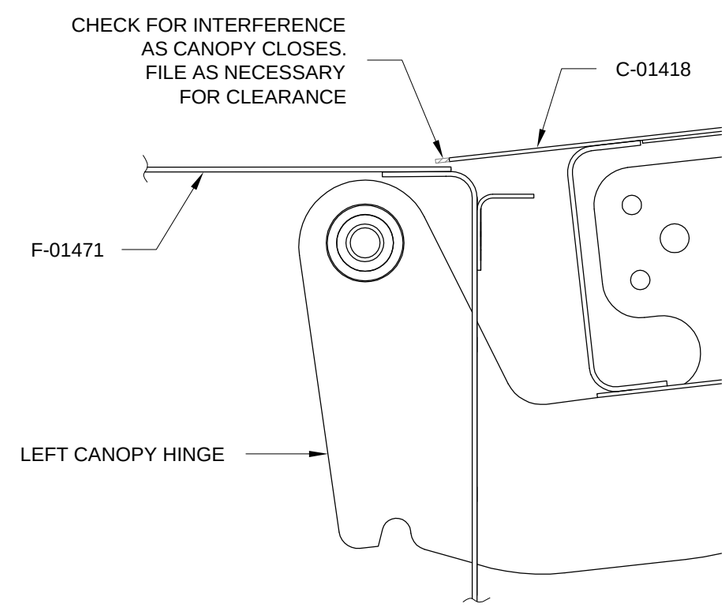

FIGURE 4: CANOPY INTERFERENCE

Step 1: Tape the template found on Page 38-39 to the C-01418 Canopy Skin as shown in Figure 1.

NOTE: The best fit can be obtained by ensuring that only the bare surface of the canopy directly contacts the aircraft structure.

Step 2: From the forward edge of the C-01401 Canopy, peel back approximately 1/4 [6.4 mm] of the protective plastic that covers the inside surface.

Step 3: Position the canopy on top of the Canopy Frame Assembly. Align the forward lower edge of the canopy with the forward canopy line on the template. Move the canopy left and right to achieve a "best fit" lateral position with respect to the Left and Right Canopy Side Rail Assemblies and Roll Bar Assembly.

Tuck the canopy inside the C-01418 Canopy Skin just aft of the slot in the skin. See Figure 4.

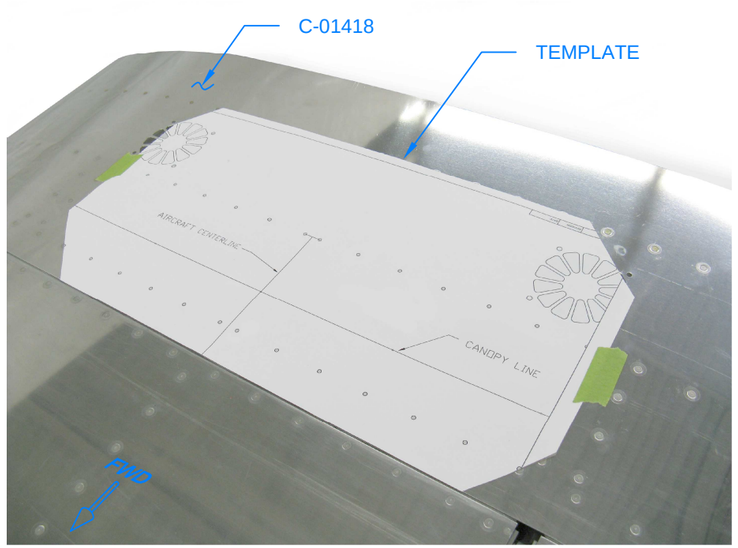

FIGURE 1: FORWARD CANOPY LINE TEMPLATE

Step 4: Reference the aircraft centerline on the template and the rivets in the F-01432A Roll Bar Brace to mark the centerline on the canopy and Roll Bar Brace Assembly as Shown in Figure 2.

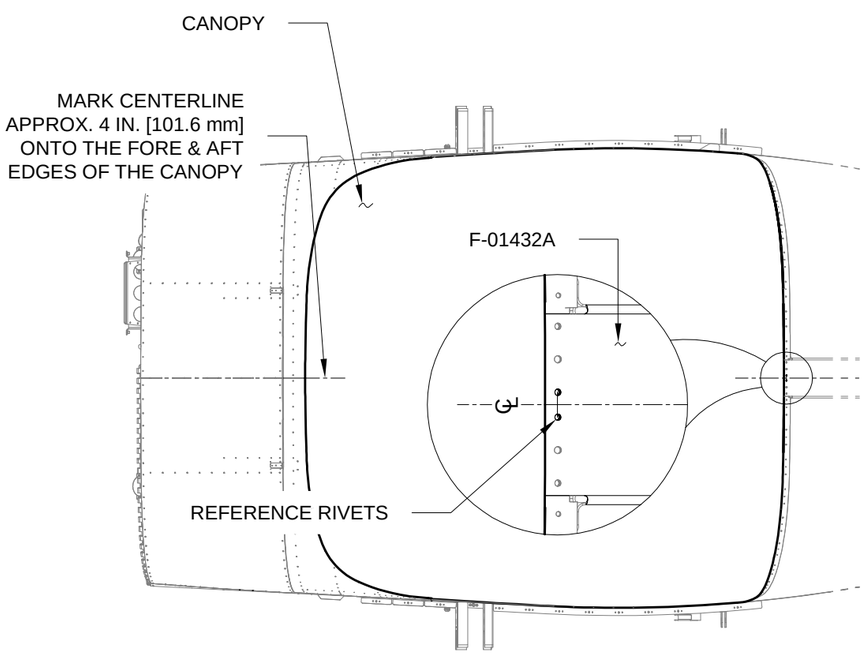

FIGURE 2: CANOPY CENTERLINE

NOTE: The canopy may extend too far aft as supplied. This is to accommodate variations in the Roll Bar Assembly caused by assembly and manufacturing tolerances.

If the canopy extends aft and rests on top of the F-01431D Window Shim, it will have to be trimmed according to Steps 5-8.

Step 5: Mark the trim line onto the canopy 1/32 [0.8 mm] from the forward edge of the F-01431D Window Shim as shown in Figure 3.

Step 6: Remove the canopy from the Canopy Frame Assembly.

Step 7: Trim the aft edge of the canopy to the line marked in Step 5.

Step 8: Position the canopy using the template and centerlines. Verify that the aft edge of the canopy clears the forward edge of the F-01431D Window Shim as shown in Figure 3.

Step 9: On both sides of the canopy, chamfer the inboard edge along a line 3 in. [76.2 mm] forward of "Point Oscar" as called-out in Figure 4.

Do not chamfer the canopy edge below the minimum thickness shown in Figure 4.

This chamfered area will be further refined later.

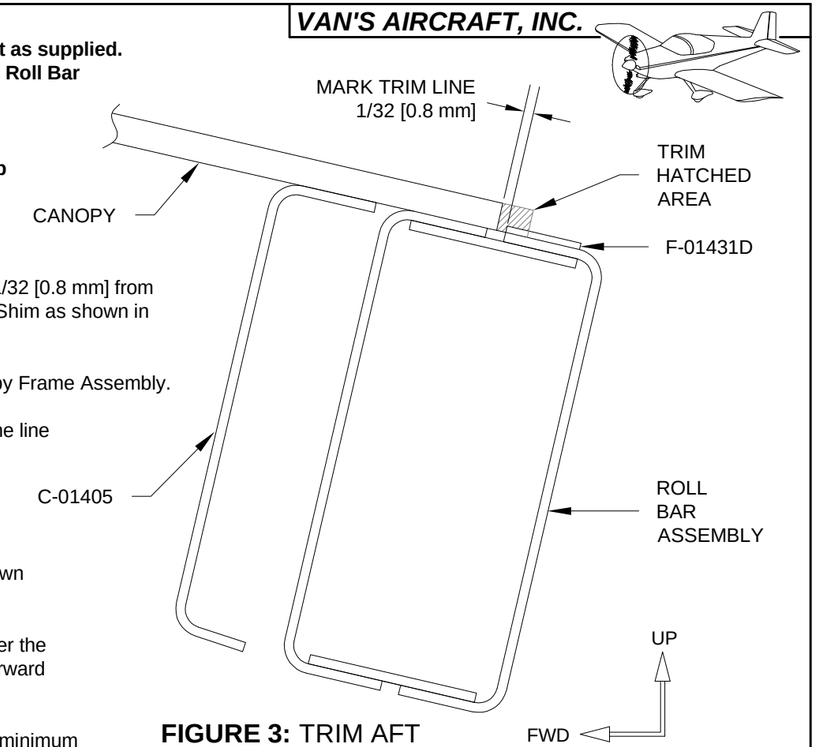

FIGURE 3: TRIM AFT CANOPY EDGE

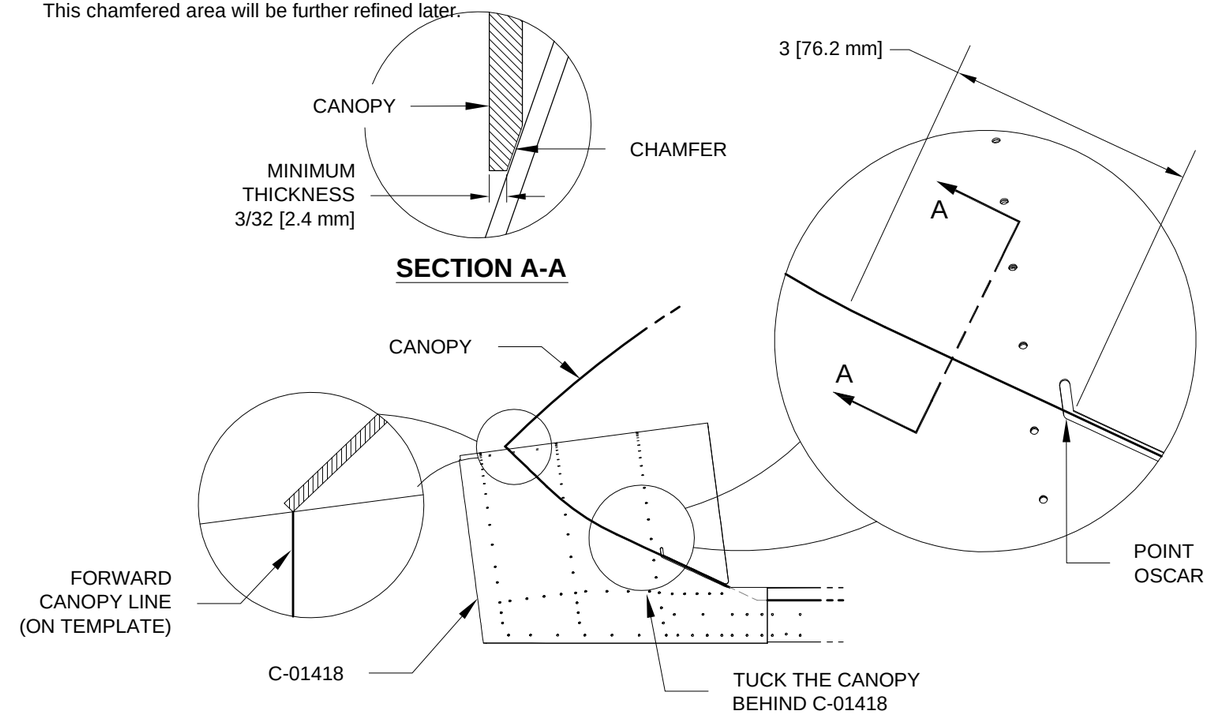

FIGURE 4: CHAMFER CANOPY FORWARD OF POINT OSCAR

NOTE: Steps 1-4 are intended to ease the transition of the edge of the canopy as it tucks behind the skin aft of the notch in the canopy skin.

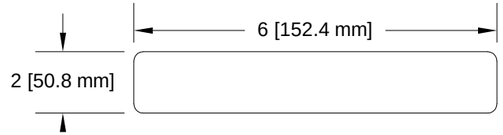

FIGURE 1: CANOPY FEELER GAUGE

Step 1: Fabricate the canopy feeler gauge from .040 aluminum as shown in Figure 1.

Smooth the edges of the feeler gauge to prevent canopy scratches in the next steps.

Step 2: Use the feeler gauge to probe around the inside of the canopy near the notch in the C-01418 Canopy Skin. See Figure 2. Note the contact areas where the feeler gauge is in contact with both the canopy and canopy skin as shown in Section A-A. Have a helper mark the contact areas on the outside of the canopy.

Step 3: Remove the canopy and use sandpaper or a sharp file to remove a wedge of material inside the contact areas until the inside surface of the canopy is roughly parallel with the canopy skin. Do not reduce the thickness of the canopy below the minimum edge thickness shown in Section A-A.

Step 4: Reinstall the canopy and use the feeler gauge to note any additional contact areas further forward/inboard.

Step 5: Note any locations along the forward edge of the canopy that cause gaps between the canopy edge and the canopy skin.

Sand or file these locations until the entire forward edge of the canopy contacts the canopy skin with only light finger pressure applied.

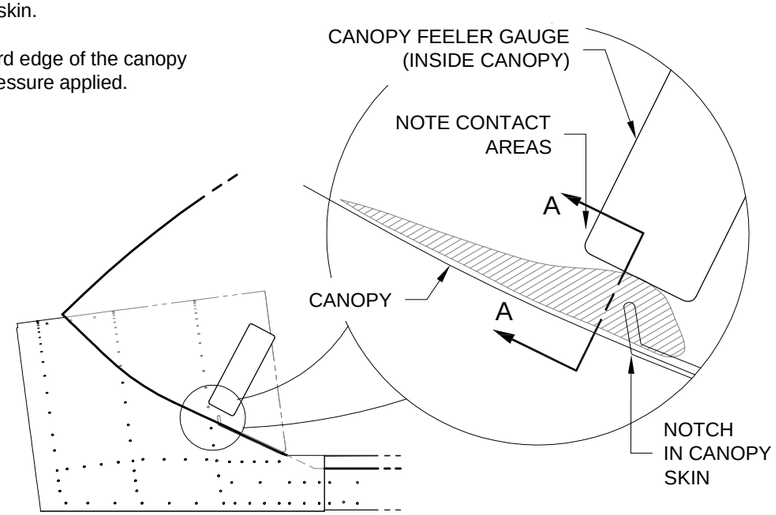

FIGURE 2: CANOPY CONTACT AREAS

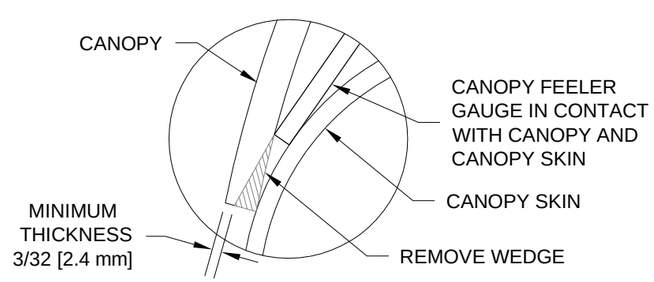

SECTION A-A

Step 6: The sides of the canopy may be in contact with the C-01407-L & -R Aft Canopy Rails below the bend tangent point called out in Figure 3. Contact below this point will undesirably lift the sides of the canopy away from the rail. Trim the bottom edge of the canopy along the aft canopy rails as shown in Figure 3.

Step 7: Measure the thickness of the canopy along the length of the C-01407-L Aft Canopy Rails. If the thickness of the canopy is less than shown in Figure 3, the C-01423 Canopy Shims will be required.

Step 8: Secure the canopy by clecoing the C-01419-L & -R Side Skin, C-01423 Canopy Shims (if required), and C-01437-L & -R Canopy Handles to the Canopy Frame Assembly. See Figure 3 and Page 38-13, Figure 2.

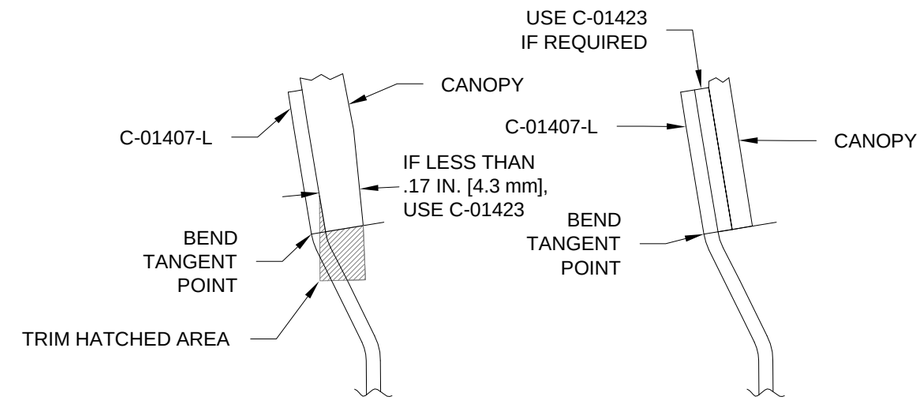

FIGURE 3: CANOPY TO AFT SIDE RAIL INTERFACE

Step 9: Weight down the forward edge of the canopy as shown in Figure 4. A ratchet strap looped over the canopy from between the wing attach stubs also works well here. Ensure continuous contact between the forward edge of the canopy and the canopy skin. Verify that the Aft Canopy Assembly is securely clamped to the roll bar.

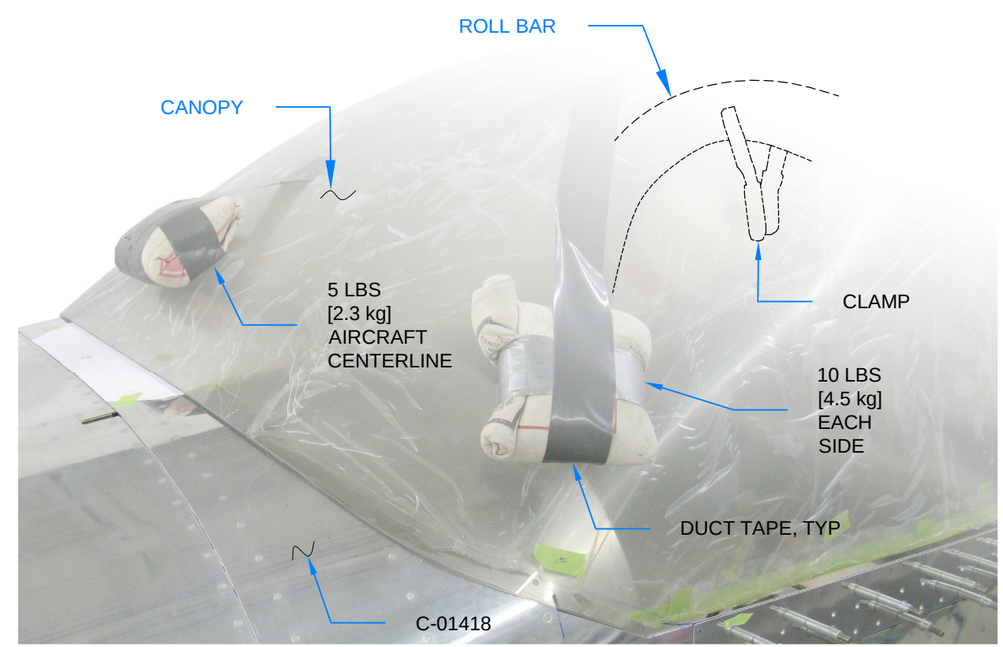

FIGURE 4: WEIGHT & CLAMP CANOPY

NOTE: For all steps on this page, refer to Figure 1.

NOTE: When drilling the canopy, be aware of visual distortion due to paralax. Aways drill perpendicular to the surface of the window or skin. Remove any drill shavings trapped between the canopy and skins after drilling each hole.

Step 1: Close, latch, and clamp the Canopy Frame Assembly to minimize warping during the following steps.

Step 2: Drill #40 through the canopy into the locating holes in the Canopy Frame Assembly as indicated by the "STEP 2" call-out. Start at the holes near the centerline and work outboard symmetrically. Install a cleco in each hole as it is drilled.

Step 3: Match-Drill #40 the holes in the C-01419-L & -R Canopy Side Skins into the canopy, C-01423 Canopy Shims (if required), and the C-01407-L & -R Canopy Rails. See the "STEP 3" call-out. Begin at the forward most holes and work aft symmetrically. Have a helper on the inside of the canopy position a block of wood behind each hole as it is drilled. Install a cleco in each hole as it is drilled.

Step 4: Match-Drill or Drill #40 the holes indicated by the "STEP 4" call-outs.
Begin at the forward most hole and inboard most holes and work symmetrically towards the lower aft corners of the canopy. Alternate match-drilling the holes in the canopy rails and drilling the canopy. Install a cleco in each hole as it is drilled.

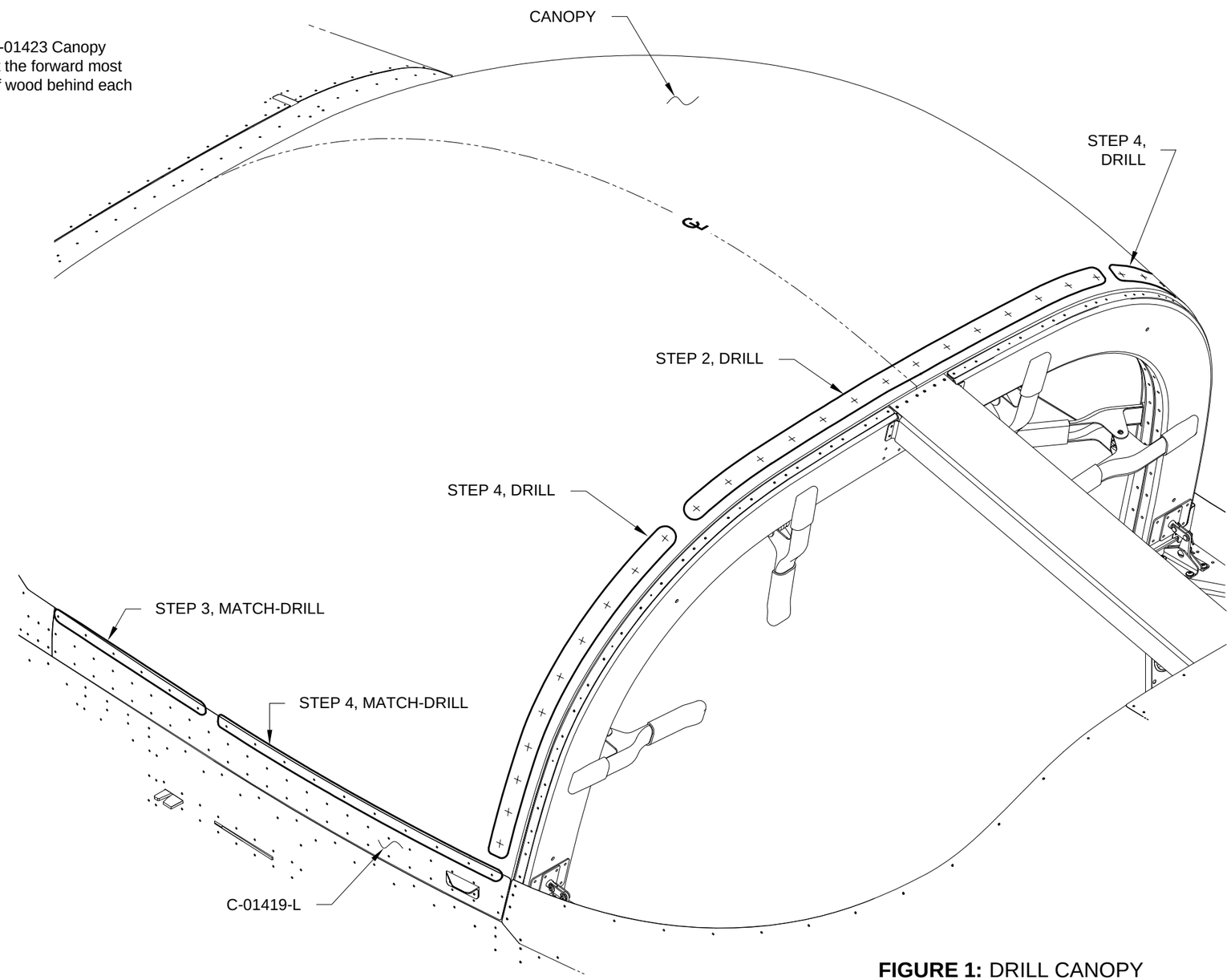

FIGURE 1: DRILL CANOPY

Step 1: Remove the C-01419-L & -R Canopy Side Skins.

Step 2: As indicated in Figure 1, final-drill #27 the holes in the C-01419-L & -R Canopy Side Skins.

Step 3: Re-cleco the C-10419-L & -R Canopy Side Skins to the Canopy Frame Assembly.

Step 4: Ensure the Canopy Frame Assembly is closed and latched to minimize warping during the following steps.

Step 5: Final-Drill #27 and cleco holes common to the canopy and Canopy Frame Assembly indicated in Figure 2.

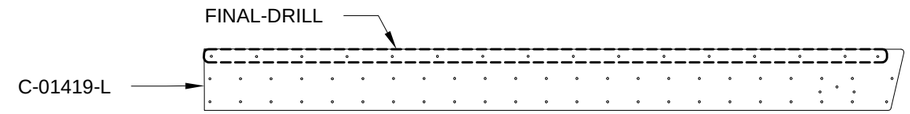

FIGURE 1: FINAL-DRILL CANOPY SIDE SKINS

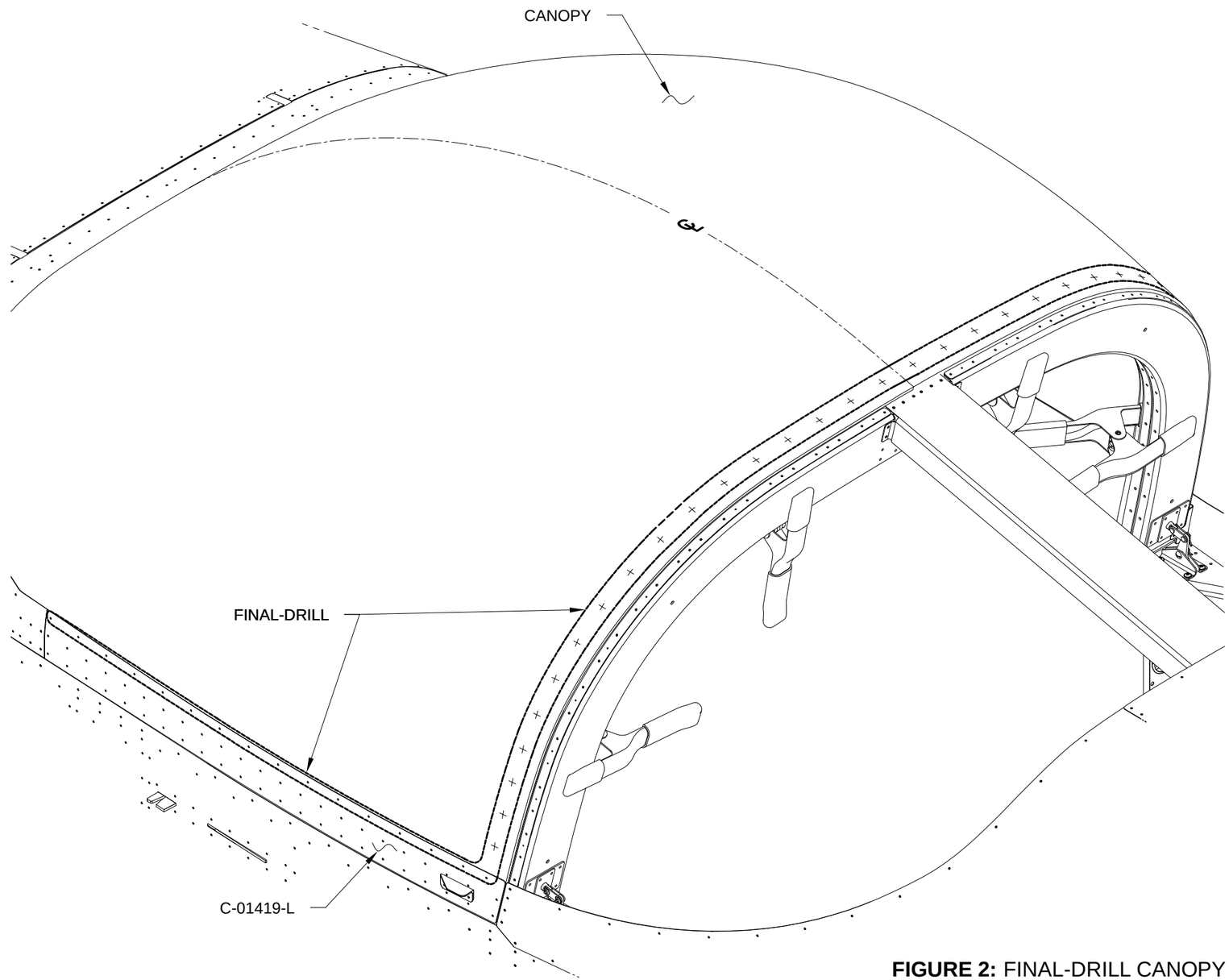

FIGURE 2: FINAL-DRILL CANOPY

Step 1: Mark the glare shield area on the C-01418 Canopy Skin by tracing along the forward edge of the canopy.

Step 2: Remove the canopy assembly from the aircraft. Now is an excellent time to scuff and paint this area flat black. See Figure 1.

NOTE: View RV-14 Video 38-01 (available through the RV-14 Service Information and Revisions page on the Van's Aircraft Website, or available for purchase on DVD through Van's) for an overview that will provide additional context to the following steps.

Step 3: Use calipers to lightly scribe the "aft fairing line" into the canopy as shown in Figure 2, Figure 3, and Detail A.

Step 4: Carefully cut away the protective plastic that covers the canopy in the area forward of the aft fairing line.

Step 5: Protect the canopy area aft of the "aft fairing line" with a double layer of quality electrical tape. There should be no extra material such as protective plastic or tape forward of the aft fairing line.

Step 6: Use scrap aluminum to fabricate a straight edge as shown in Figure 2.

Step 7: Starting at the aircraft centerline, use the straight edge to define the "forward fairing line" on the canopy skin as shown in Figure 2. Keep the straight edge in contact with the aft fairing line, perpendicular to the aft fairing line, and in contact with the canopy skin while moving the straight edge outboard.

As the straight edge moves outboard, the concave shape formed by the canopy and canopy skin will begin to flatten into to a straight line. Mark the point where the shape begins to flatten as "Point Sierra" on the canopy and canopy skin. The "forward fairing line" ends at Point Sierra. See Figure 3.

Step 8: See the "STEP 8" call-out in Figure 3.

Use coarse sandpaper on a narrow (7/8 [22.2 mm]) sanding block, or a sharp file, to reduce the outboard edge of the canopy in this area until the corners of the straight edge can touch both the aft canopy line and the canopy skin without "rocking" along the protruding edge of the canopy. This will ensure a lower profile canopy fairing later on.

Do not file or sand beyond the electrical tape applied in Step 5.

FIGURE 1: GLARE SHIELD

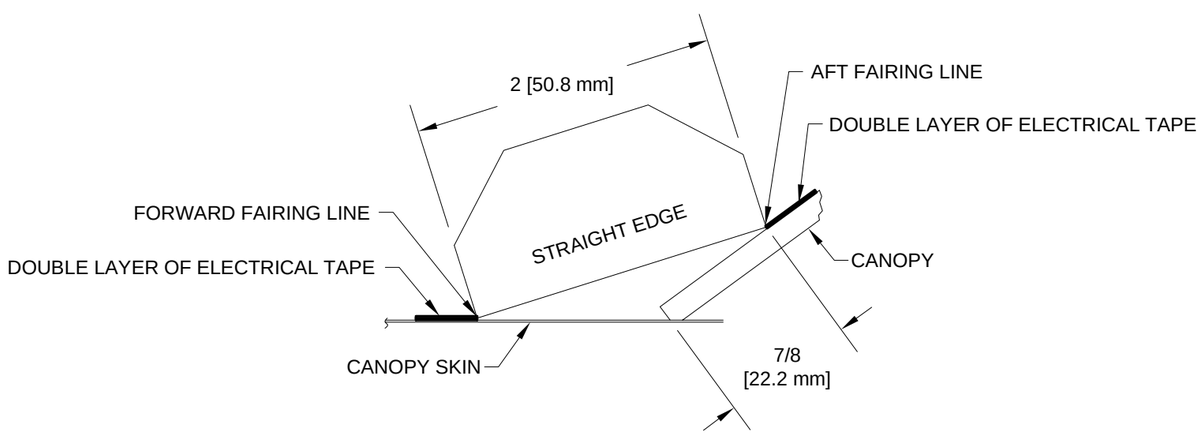

FIGURE 2: FORWARD AND AFT FAIRING LINES

Step 9: Cut out the Side Templates found on the supplied 24 X 36 Canopy Fairing Template drawing.

Step 10: Position the Side Templates on the C-01418 Canopy Skin as shown in Figure 3.

Step 11: Trace the "outboard forward fairing line" onto the canopy skin. This line should approximately align with the "Forward Fairing Line".

Step 12: Apply a double layer of quality electrical tape to the canopy skin along the "forward fairing line" and "outboard forward fairing line" as shown in Figure 3.

Step 13: Use 80 grit sandpaper to scuff the canopy skin and canopy within the shape of the canopy fairing as defined by the electrical tape. Scuff until there is no trace of reflection when viewed at a low angle, looking toward a light source. This level of scuffing will ensure a good bonding surface for the canopy fairing. See Figure 4.

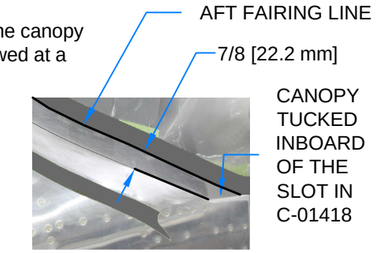

DETAIL A

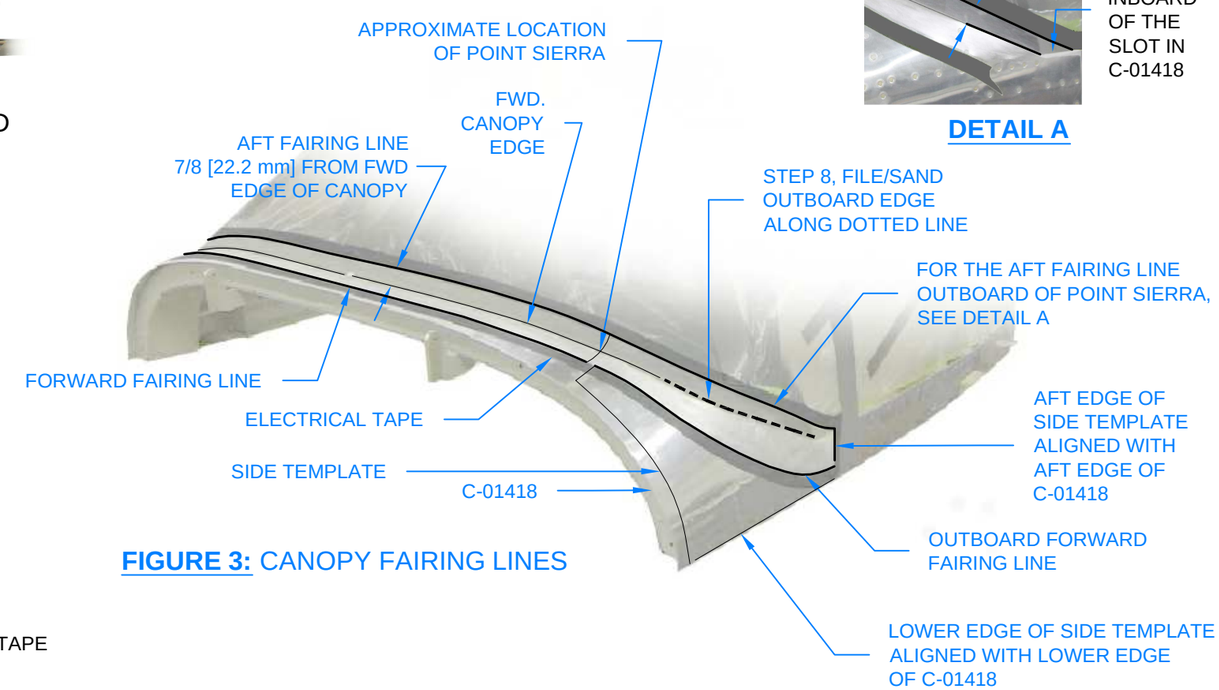

FIGURE 3: CANOPY FAIRING LINES

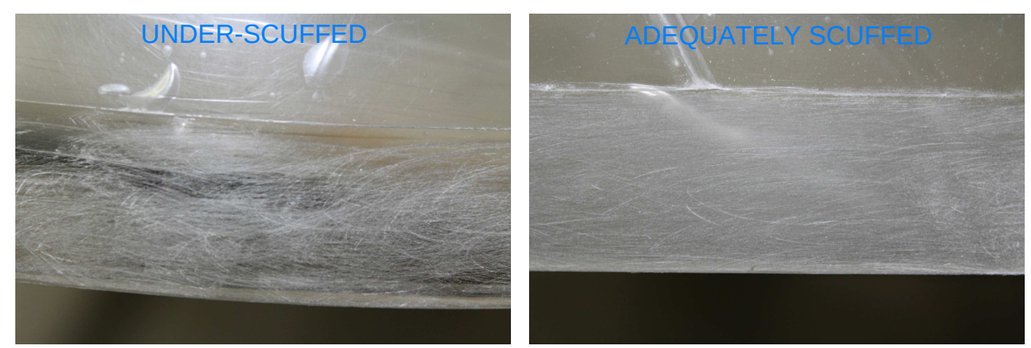

FIGURE 4: SCUFFING

NOTE: For the steps 1-9, refer to Figure 1.

Step 1: Remove the canopy and C-01419-L & -R Canopy Side Skins from the Canopy Frame Assembly.

Step 2: Carefully deburr the holes on the inside of the canopy, and on both sides of the Left and Right Canopy Rail Assemblies.

Step 3: As called out in the figure, break the upper edges of the C-01419-L & -R Canopy Side Skins and the lower edges of the slots in the C-01418 Canopy Skin to fit tightly against the canopy.

Step 4: Dimple the canopy attach holes in the C-01419-L & -R Canopy Side Skins.

Step 5: Machine countersink all canopy attach holes in the canopy as called out.

Step 6: Position the canopy back onto the Canopy Frame Assembly.

Step 7: Cleco the C-01419-L & -R Canopy Side Skins and C-01437-L & -R Canopy Handles to the Canopy Frame Assembly.

Step 8: Loosely attach the hardware along the side rail. See the "TYP ALONG SIDE RAIL" call-out.

Step 9: Rivet the C-01419-L & -R Canopy Side Skins and C-01437-L & -R Canopy Handles to the Canopy Frame Assembly as called out. See the "DO NOT RIVET" call-out for exceptions.

Step 10: Separate the C-01446 Seal Retainers as shown in Figure 2. Note that the outboard ends are slanted.

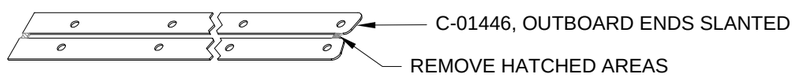

FIGURE 2: SEPARATE SEAL RETAINERS

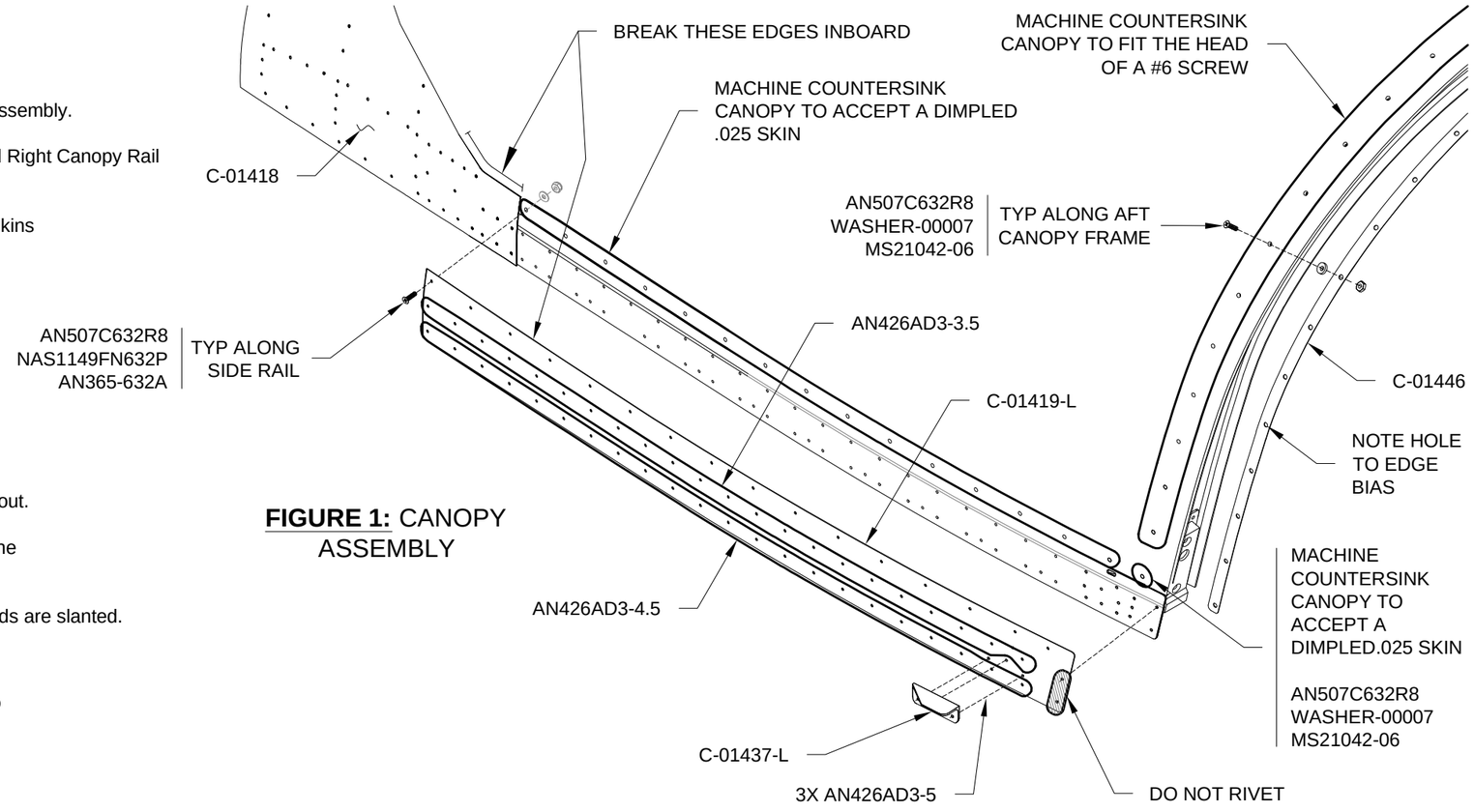

FIGURE 1: CANOPY ASSEMBLY

Step 11: Lay the C-01450 Rear Seal (provided as a length of SEAL-00002 material) on a flat work table. Center the C-01446-L & -R Seal Retainers on top of the rear seal as shown in Figure 3.

Step 12: Mark the hole locations in the C-01446-L & -R Seal Retainers on the C-01450 Rear Seal.

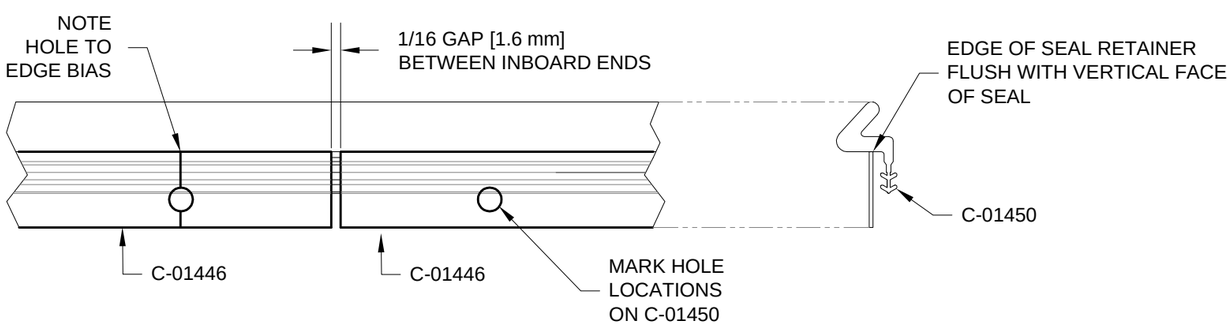

FIGURE 3: MARK REAR SEAL HOLE LOCATIONS

Step 34: Trim a notch around each marked hole location on the C-01450 Rear Seal. Use a paper hole punch to create the radius corners, then use a razor blade to cut the straight edges of the notches. Position the notches as close to the vertical face of the rear seal as possible to allow it to rest as far forward as possible when installed. See Figure 4.

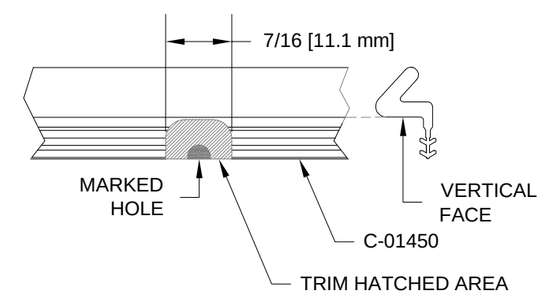

FIGURE 4: REAR SEAL NOTCH

Step 14: Insert the screws along the aft canopy frame, then tape the heads of the screws in place. See the "TYP ALONG AFT CANOPY FRAME" call-out in Figure 1.

Step 15: Flip the Canopy Assembly upside down.

Step 16: Loosely attach the canopy and C-01446 Seal Retainers (but not the C-01450 Rear Seal) to the Canopy Frame Assembly using the hardware called out in Figure 1. Remove the tape to access the screws.

Step 17: Flip the Canopy Assembly right side up.

Step 18: Carefully tighten the hardware in "ZONE 1" as shown on Page 38-27, Figure 4. Use caution to prevent canopy cracks due to overtightening.

Step 1: From the provided PS-UHMW-125X1/2X5 strips, fabricate two C-01410 Canopy Wear Strips as shown on Page 38-41, Figure 1.

Step 2: Radius and chamfer the C-01410 Canopy Wear Strips as shown in Figure 1. Label these parts "left" and "right".

Step 3: Position and clamp the canopy wear strips onto the Canopy Assembly shown in Figure 1.

Step 4: Match-Drill #40 the two holes in the C-01419-L Canopy Side Skin and C-01407-L & -R Aft Canopy Rails into the canopy wear strips.

Step 5: Machine countersink the holes in the canopy wear strips to fit the head of an AN426AD3 rivet on the inboard side. Although the rivets will be installed flush on the outboard side, the machine countersinking will allow the shop heads of the rivets to be set flush with the inboard surface of the canopy wear strip.

Step 6: Rivet the canopy wear strips to the Canopy Assembly as shown in Figure 1.

Step 7: If necessary, sand the shop heads of the rivets flush with the inboard surface of the canopy wear strips.

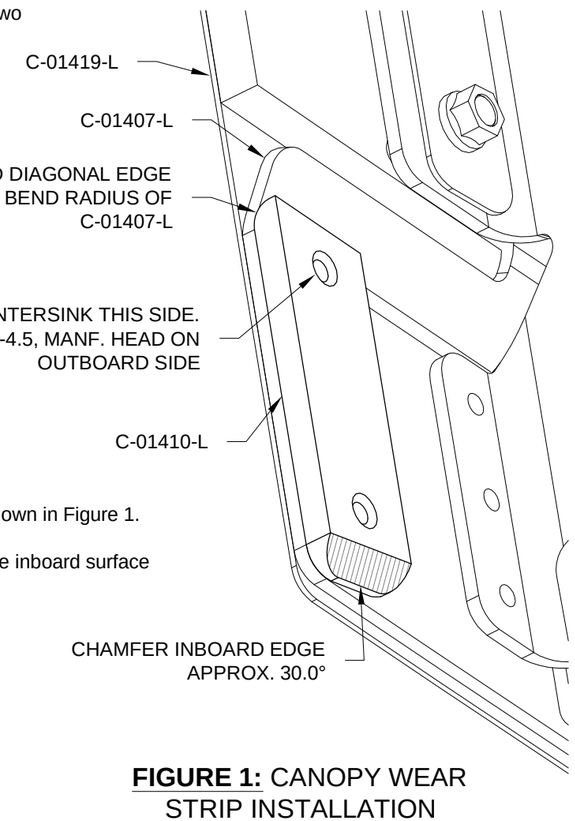

FIGURE 1: CANOPY WEAR STRIP INSTALLATION

Step 8: Separate the F-01449B Hinge Covers as shown in Figure 2. Do not trim the ends yet.

Step 9: Use finger pressure as necessary to adjust the bend angle of the hinge covers to 90°. See Figure 2.

Step 10: Trim the ends of the hinge covers as shown in Figure 2, then lightly deburr them. Do not reduce the overall width of the parts when deburring.

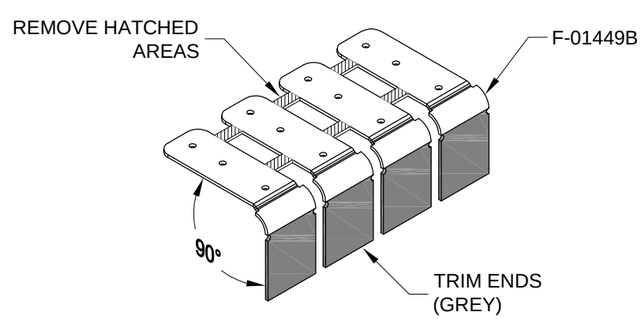

FIGURE 2: HINGE COVERS

Step 11: Test fit the F-01449B Hinge Covers into the canopy hinge slots as shown in Figure 3.

NOTE: Perform Step 12 and Step 13 simultaneously.

Step 12: Check for interference between the hinge covers and F-01455C Seal Angles. If interference exists, lightly file the seal angles where necessary and re-check for interference.

Step 13: Check for interference of the hinge covers with the F-01471 Top Skin and F-01455 Sub Panel. If interference exists, lightly file the hinge covers as necessary and re-check for interference.

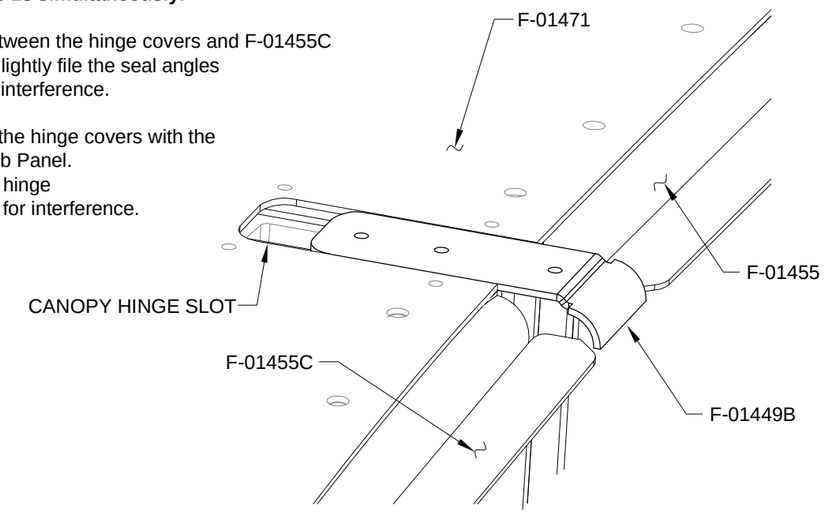

FIGURE 3: HINGE COVER FIT

Step 14: Install, close, and latch the Canopy Assembly.

Step 15: Position weights on the front of the canopy as shown on Page 38-22, Figure 4.

Step 16: Carefully tighten the canopy attach screws in "ZONE 2" as shown in Figure 4. Use caution to prevent canopy cracks due to overtightening. "ZONE 1" was tightened previously, and "ZONE 3" will be tightened later.

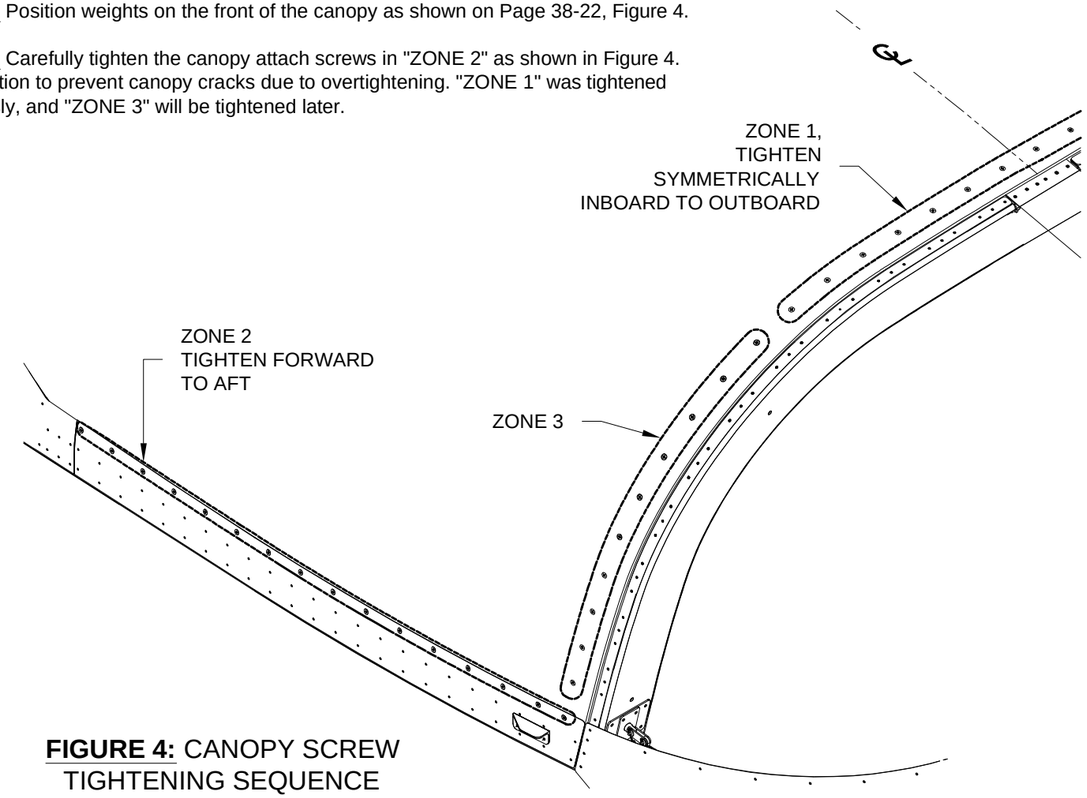

FIGURE 4: CANOPY SCREW TIGHTENING SEQUENCE

To supplement Steps 1-10, view RV-14 Video 38-01.

Step 1: Verify that the Canopy Assembly is closed and latched.

Step 2: Remove any weights or ratchet straps from the Canopy Assembly. Note any areas where the forward edge of the canopy bulges away from the C-01418 Canopy Skin. These areas will require a C-01452 Canopy Clip. If no bulges are noted, at least three canopy clips (centerline and sides as shown in Figure 3.) will be required in the following steps.

Step 3: Dimple the holes in the C-01452 Canopy Clips and separate them as shown in Figure 1.

Step 4: Position the canopy clips as necessary to secure the canopy in the areas noted in Step 2. It is not necessary to pre-bend the clips, the riveting process will bend them sufficiently to retain the canopy. See Figure 2.

Step 5: In the areas noted in Step 2, use a dremel tool or sandpaper to remove material from the canopy so the canopy clip can lie below the surface of the canopy as shown in Figure 2.

Step 6: Match-Drill #30 the holes in the canopy clips into the C-01418 Canopy Skin in the areas noted in Step 2, and positioned to fit as described in Step 5. Avoid drilling into the understructure of the Canopy Frame Assembly.

Step 7: Rivet the canopy clips to the skin using the rivets called out in Figure 2.

Step 8: If necessary, sand or file the top edge of the canopy clips as necessary so they can lie below the surface of the canopy as shown in Figure 2.

NOTE: Steps 9-11 are optional. It may be easier for some builders to fabricate the fiberglass fairing while the canopy is on a work table. Fabrication of the fiberglass fairing can also be accomplished with the canopy closed and latched to the fuselage.

Step 9: Fabricate two 1 X 4 X 4 [25.4 X 101.6 X 101.6 mm] Spacer Blocks from wood.

Step 10: Clamp a pair of 2 X 4s to a sturdy, waist high work table. Verify that the 2 X 4s are level and parallel, creating a framework for the Canopy Assembly to rest upon without inducing any twist.

Step 11: Remove the Canopy Assembly from the fuselage and clamp it to the 2 X 4s and work table using the Spacer Blocks as shown in Figure 3.

Step 12: Use isopropyl alcohol and a series of lint free cloths to clean the scuffed surfaces of the canopy skin and canopy. Clean until a fresh, alcohol soaked cloth produces no visible residue when wiped across the surfaces.

CAUTION: Large amounts (greater than 1/4 cup [59.1 ml]) of epoxy and hardener left in a small, enclosed space (like a cup) can produce dangerous amounts of heat. Never mix a larger amount of resin unless it will be dispersed quickly over a large area.

NOTE: To supplement Steps 12-18, view RV-14 Video 38-02.

Step 13: Prepare a mixture of epoxy resin, slow hardener, and fiberglass dye. Add micro-balloons until the mixture no longer flows when the mixing cup is turned on its side. From now on, this mixture will be referred to as "void filler".

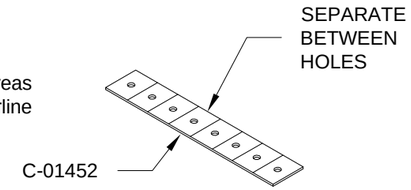

FIGURE 1: CANOPY CLIP SEPARATION

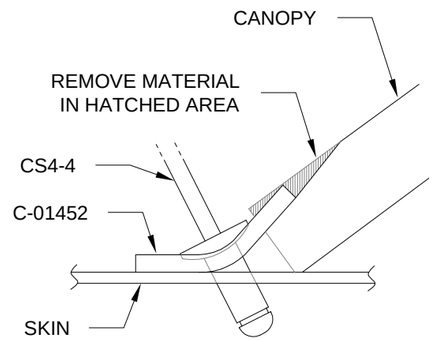

FIGURE 2: CANOPY CLIP INSTALLATION

FIGURE 3: SECURE CANOPY ASSEMBLY

Step 14: Place the void filler into a plastic bag. Remove the air from the bag and cut a 1/4 [6.4 mm] hole in one corner.

Step 15: In the areas shown in Figure 4 and Figure 5, squeeze the void filler out of the bag into the void between the canopy and skin. A larger amount of void filler is necessary in the area noted in Figure 4. Excess void filler on the canopy and skin will be removed later

Step 16: Use a craft stick to smooth and push the void filler into the void. See Figure 5.

Step 17: When the void filler has cured to a rubbery consistency (still able to be marked with a fingernail), use a sharp knife to shave off any high spots. This will save time while sanding later. See Figure 5 and Figure 6.

Step 18: Wait until the void filler has completely cured.

Step 19: Due to the presence of micro-balloons, the void filler is a less effective fiberglass bonding surface than a scuffed canopy or aluminum skin. Use a sanding block to sand the void filler until only the area filling the void remains. See Figure 7. Use 80 grit sandpaper to finish the surface of the canopy and skin in preparation for fiberglass bonding.

Step 20: Clean the sanded surfaces of the canopy skin, canopy, and void filler as described in Step 12.

Step 21: Use the template shown on Page 38-41, Figure 2, to fabricate the Radius Gauge from a piece of scrap aluminum.

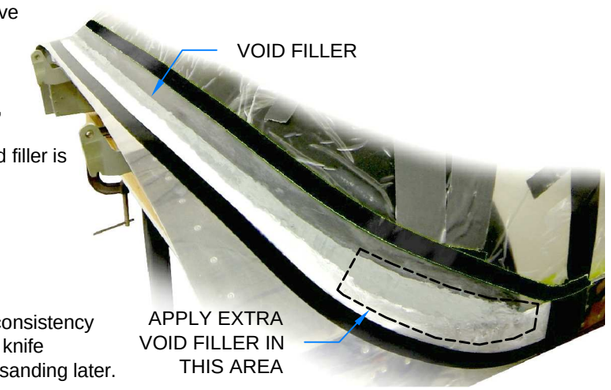

FIGURE 4: APPLY VOID FILLER

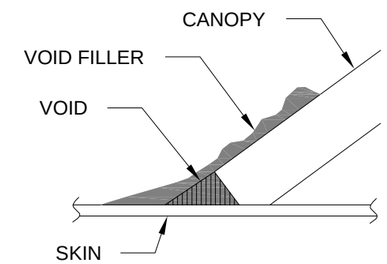

FIGURE 5: APPLY VOID FILLER

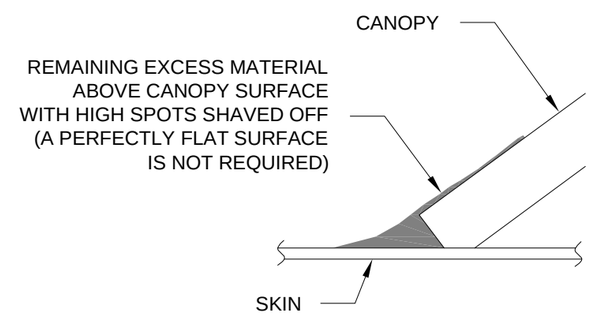

FIGURE 6: SHAVE HIGH SPOTS

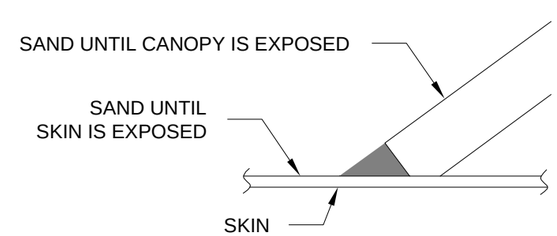

FIGURE 7: SAND VOID FILLER

NOTE: View RV-14 Video 38-03 before proceeding.

Step 1: Use a rotary cutter and a straight edge to cut strips of glass fabric in the dimensions shown below. Cut the strips parallel to the weave. See Figure 1. Loosely roll the strips after cutting to prevent distortion.

Dimension	Qty
43 [109.2 cm] x 1/4 [6.4 mm]	2
43 [109.2 cm] x 3/8 [9.5 mm]	2
43 [109.2 cm] x 1/2 [12.7 mm]	2
43 [109.2 cm] x 5/8 [15.9 mm]	1
43 [109.2 cm] x 3/4 [19.0 mm]	1
43 [109.2 cm] x 1 [25.4 mm]	1
28 [71.1 cm] x 1 3/8 [34.9 mm]	1
28 [71.1 cm] x 1 5/8 [41.3 mm]	1
28 [71.1 cm] x 1 7/8 [47.6 mm]	1
30 [76.2 cm] x 1 5/8 [41.3 mm]	1

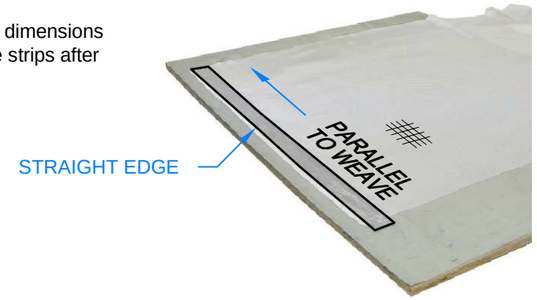

FIGURE 1: GLASS FABRIC

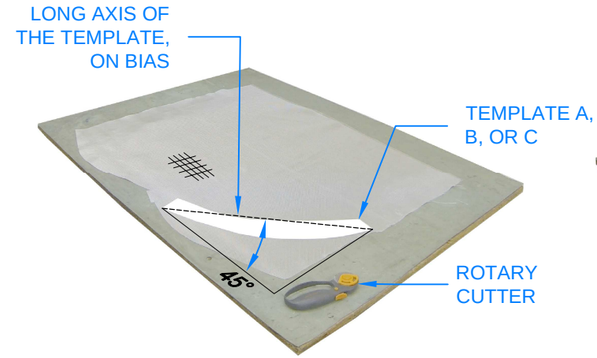

FIGURE 2: TEMPLATE ON BIAS

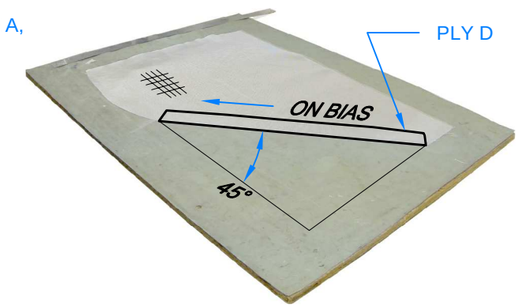

FIGURE 3: PLY D ON BIAS

Step 2: Cut out the Ply A, Ply B, and Ply C templates from the supplied 24 X 36 Canopy Fairing Template drawing.

Step 3: Use the templates and a rotary cutter to cut out two examples of Ply B and two examples of Ply C from glass fabric. Align the long axis of the templates "on the bias" (45° to the weave, see Figure 2). Carefully roll up the plies after cutting to prevent distortion.

Step 4: Use the template and a rotary cutter to cut out two examples of Ply A from glass fabric. Leave at least 1/2 [12.7 mm] extra material outside the perimeter of the template. These pieces will be cut to final size later. Carefully roll up the plies after cutting to prevent distortion.

Step 5: Use the template and a rotary cutter to cut out two examples of Ply A from Peel Ply. Leave at least 1 [25.4 mm] around the perimeter of the template. From now on, these will be referred to as "Peel Ply A".

Step 6: Use a rotary cutter and a straight edge to cut a 30 [76.2 cm] x 2 1/2 [63.5 mm] strip of glass fabric on the bias. From now on, this strip will be referred to as "Ply D". See Figure 3. Carefully roll up the ply after cutting to prevent distortion.

Step 7: Use a rotary cutter and a straight edge to cut out a 32 [81.3 cm] x 2 1/8 [54.0 mm] strip of peel ply. From now on, this will be referred to as "Peel Ply D

Step 8: Apply a sacrificial layer of quality masking tape to match the electrical tape defining the aft edge of the fairing. See Figure 4.

Step 9: Protect the canopy skin with masking paper as shown in Figure 4.

Step 10: Lay a large piece of static cling food wrap on a flat work table. Lay Ply D and the two examples of Ply A flat on top of the food wrap.

NOTE: The remaining steps on this page and the steps on Page 38-30 should be accomplished in a single work session. Set aside at least 4 hours of uninterrupted work time before proceeding.

Step 11: Prepare a mixture of epoxy resin, hardener, and fiberglass dye, hereafter referred to as "dyed resin".

Step 12: Use a paintbrush to apply the dyed resin all the way to the edges of Ply D. Use a stippling action (poking and proding with the paintbrush, instead of a brushing action) to evenly spread the dyed resin and to avoid distorting the fiberglass cloth.

Step 13: Apply the dyed resin to within approximately 1/8 [3.2 mm] of the perimeter of Ply A.

Step 14: Apply a smooth layer of food wrap over the tops of Ply D and the two examples of Ply A.

Step 15: Use the Ply A template and a rotary cutter to trim the two examples of Ply A to final size by following the perimeter line in the template.

Step 16: Trim Ply D to 28 [71.1 cm] x 2 1/8 [54.0 mm].

Step 17: Apply a coat of dyed resin to the area where Ply A and Ply D will be applied. See Figure 4. Peel off the inner surface layer of food wrap and apply the two examples of Ply A to the left and right sides of the Canopy Assembly as shown in Figure 4. Position the upper and aft edges of Ply A as closely as possible to the edge of the sacrificial layer of masking tape without overlapping. If Ply A has been cut slightly too big, it is preferable to have overlap on the forward line of electrical tape rather than overlapping the aft line of sacrificial masking tape.

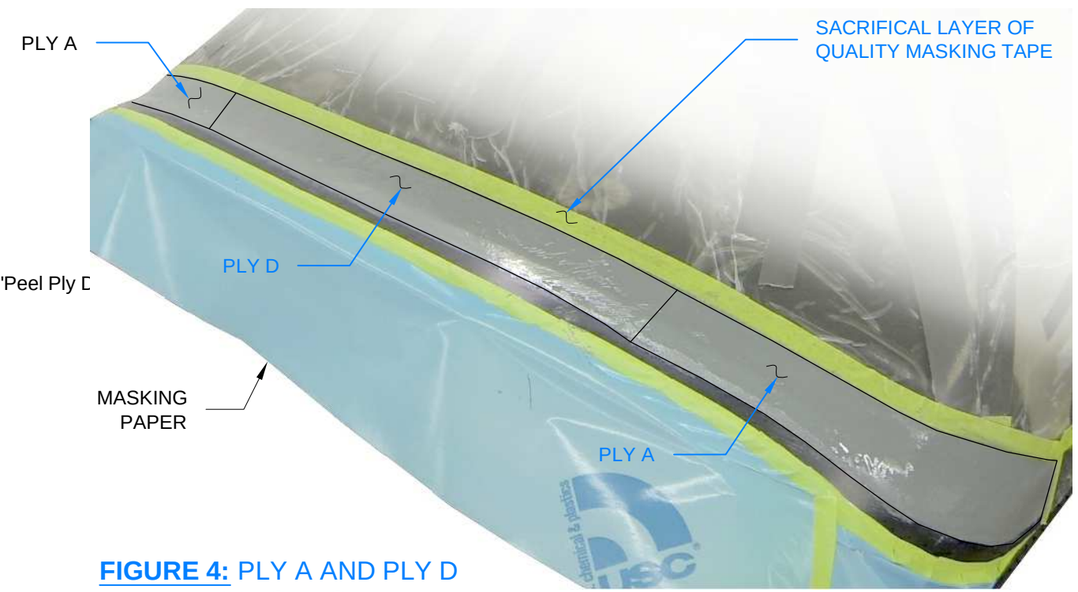

FIGURE 4: PLY A AND PLY D APPLICATION

Step 18: Remove the outer surface layer of food wrap from Ply A.

Step 19: Use a paintbrush to adjust the final position of Ply A as necessary. Use a stippling action to eliminate air bubbles and to ensure that Ply A is fully seated on the surface of the skin, void filler, and canopy.

Step 20: Apply a coat of dyed resin to the area where Ply D will be applied. See Figure 4. Peel off the inner surface layer of the food wrap and apply Ply D to the Canopy Assembly as shown in Figure 4. Position the aft side of Ply D as closely as possible to the edge of the sacrificial layer of masking tape without overlapping. If Ply D has been cut slightly too big, it is preferable to have overlap on the forward line of electrical tape rather than on the aft line of sacrificial masking tape. Butt one side of Ply D agains Ply A, then trim any excess so the remaining side is also butted against or slightly overlapping Ply A on the opposite side.

Step 21: Remove the outer surface layer of food wrap from Ply D.

Step 22: Use a paintbrush to final position Ply D as necessary. Use a stippling action to eliminate air pockets and to ensure that Ply D is fully seated on the surface of the skin, void filler, and canopy.

NOTE: Un-dyed resin will be used on the remaining layers to provide better detection of problem areas when sanding. Adding un-dyed resin to the dyed resin before the dyed resin has partially cured will dilute the tint. Wait until the dyed resin on Ply A and Ply D is mostly dry but still slightly tacky before proceeding.

Step 1: Prepare a mixture of epoxy resin and slow hardener. This mixture will be referred to hereafter as "resin".

Step 2: Use the Radius Gauge along the length of the forward edge of the canopy to visualize the optimum shape of the fairing. The fairing radius transitions into a straight line as it transitions outboard. See Figure 1 and Figure 3.

Keep this shape and transition in mind while completing the remaining steps on this page.

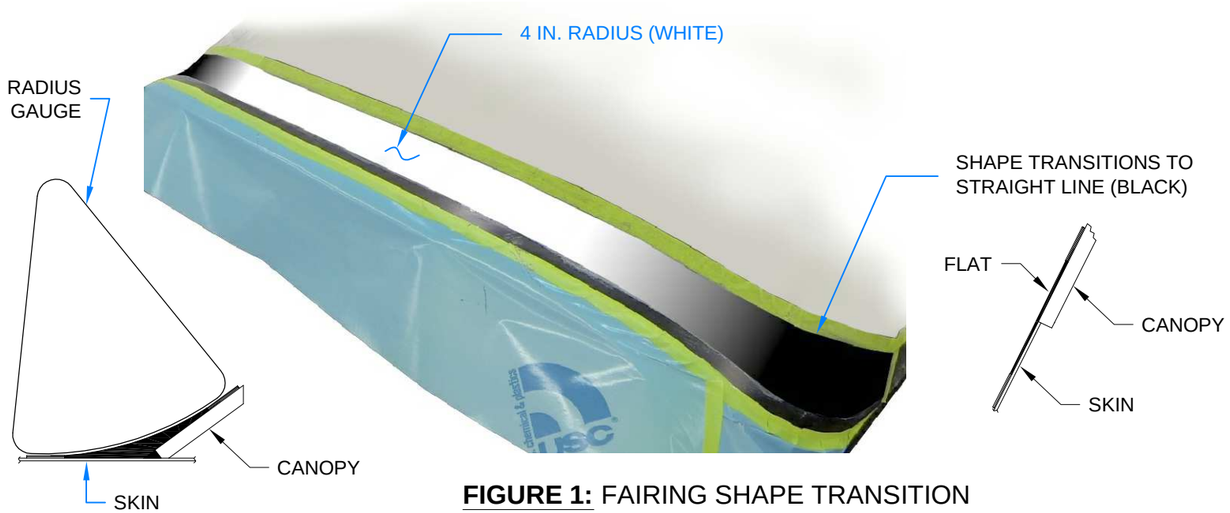

FIGURE 1: FAIRING SHAPE TRANSITION

Step 3: The partially cured dyed resin will not allow very much positioning leeway after Ply B comes into contact with it. Carefully position Ply B on the Canopy Assembly as shown in Figure 2.

NOTE: Use the glass cloth strips cut in Step 1, Page 38-29 for the following steps. Except as specifically directed, it is up to the builder to determine the best combination of glass cloth strips to use to achieve the shape of the fairing. Avoid air bubbles, pockets, and low spots by ensuring each ply or strip is completely saturated. As each layer is applied, stipple with a paintbrush to draw up the existing resin from the layer below. Apply additional resin as required. Remember that glass cloth saturated with resin, not resin alone, provides the main structural component of the fairing.

Step 4: Apply a narrow strip of glass cloth to begin building the layup shown in Figure 2 and Figure 3.

Step 5: Saturate Ply B and the narrow strip of glass cloth applied in Step 4 with resin.

Step 6: Apply Ply C as shown in Figure 2 and Figure 3.

Step 7: Use a paintbrush to stipple the surface of Ply C. This will help the ply absorb the resin underneath. Apply additional resin as necessary to saturate the ply. Ensure that there are no dry areas on the glass cloth.

Step 8: Apply additional strips of glass cloth as necessary to fill the shape of the fairing. Apply additional resin as necessary to saturate the strips as they are applied. Continue verifying the shape of the fairing with the radius gauge as glass cloth is applied to the inboard areas of the fairing. Cut out small custom shapes of glass cloth to fill any localized low spots.

Remember, sandpaper has the power to "warsh away all yer trance-greshuns." Excess glass cloth or resin can be sanded away later.

Step 9: When the fairing has reached a satisfactory shape, coat the entire surface of the fairing with a thick top layer of resin.

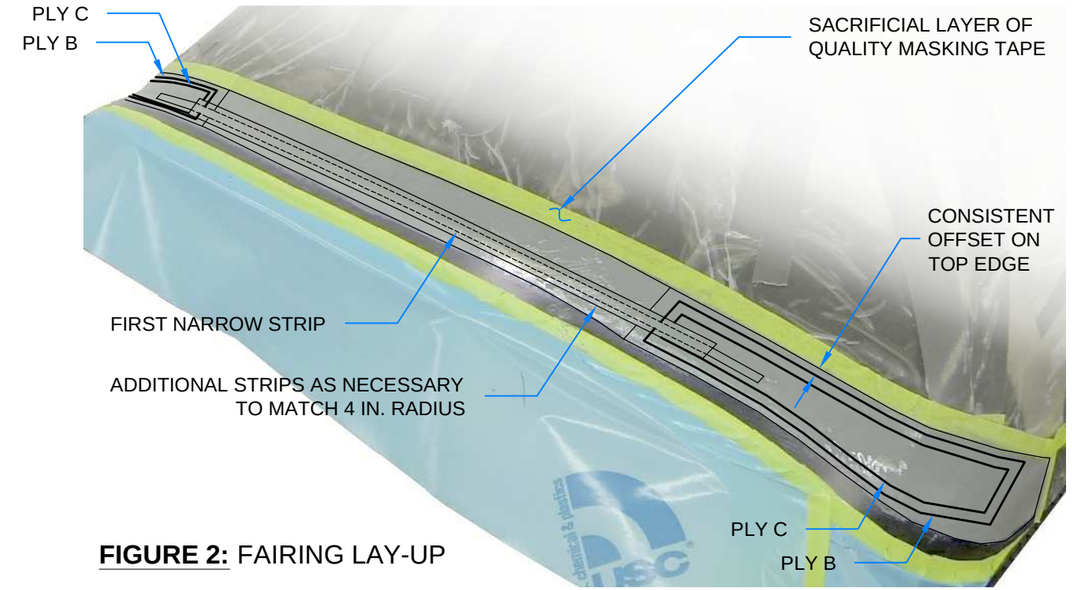

FIGURE 2: FAIRING LAY-UP

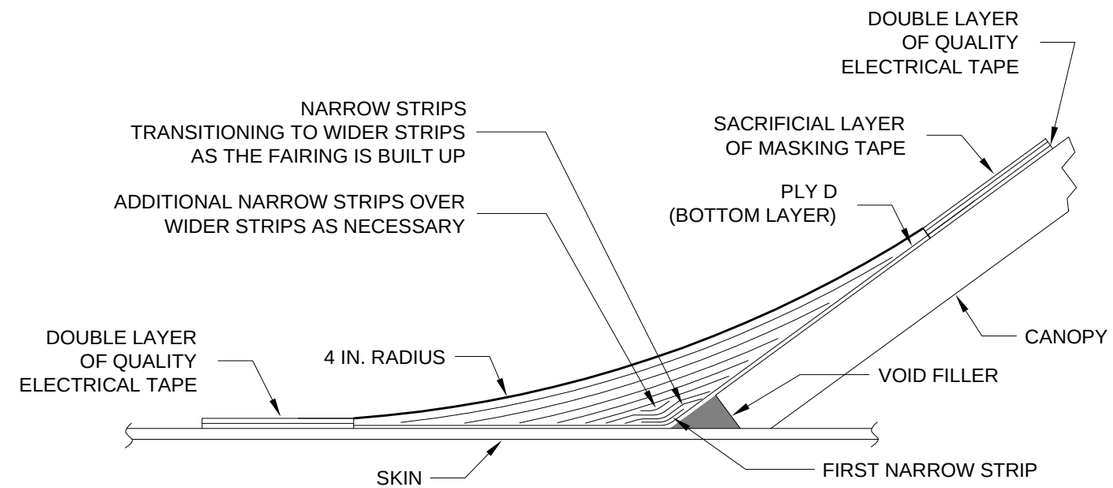

FIGURE 3: SAMPLE FAIRING CROSS SECTION (INBOARD)

Step 10: While the resin is still wet, remove the sacrificial layer of masking tape.

Step 11: While the resin is still wet, apply Peel Ply A and Peel Ply D to the fairing. On each piece of peel ply, leave some material loose outside the area of the fairing and unsaturated by resin to assist with removal later.

Step 12: Use a paintbrush to stipple the peel plies. This will draw the excess resin up into the peel ply. Avoid applying excess pressure around the edges of the fairing. Excess resin squirted out onto the electrical tape will cause increased difficulty during the later sanding process.

Step 13: Allow the resin to cure before proceeding.

NOTE: View RV-14 Video 38-04 before proceeding.

Step 1: Use the radius gauge to fabricate the Radius Sanding Block shown on Page 38-41, Figure 3.

Step 2: Fabricate a square sanding block, approximately 3 [76.2 mm] x 2 [50.8 mm].

Step 3: Remove Peel Ply D and the two examples of Peel Ply A by pulling the loose edges back over the surface of the fairing. Pull parallel to the surface of the fairing, rather than directly away from the surface.

NOTE: For Steps 4-10, See Figure 1.

Step 4: Use 60 grit sandpaper to sand the fairing to the final shape. More coarse sandpaper may be used at first, but drastic mistakes take more time to occur (and can be caught more easily) if only finer grit sandpaper is used. Always use a sanding block to achieve a shape. Using sandpaper alone to try and shape the fairing will cause many problems. Use a circular motion or change the angle of the sanding block when sanding the transition area between the radius and the flat sides of the fairing. See Page 38-30, Figure 1.

Sand the fairing to achieve the ideal shape. Stop sanding when the electrical tape is exposed.

Step 5: Fill any deep (greater than a single thickness of glass fabric) low spots with additional glass fabric and resin. Scuff the surface to be filled before applying.

Step 6: Fill any remaining low spots with a mixture of mircoballoons, resin, and hardener (or use auto body filler). Thoroughly scuff the surface to be filled with 80 grit sandpaper before applying. Wait for the mixture (or auto body filler) to cure before proceeding.

Step 7: Sand any remaining problem areas to the final shape of the fairing.

Step 8: Remove the electrical tape along the forward edge of the fairing.

Step 9: Use fine grit sandpaper to sand the forward edge of the fairing to a feathered edge.

Step 10: Use isopropyl alcohol and a series of lint free cloths to clean the surface of the fairing. Clean until a fresh, alcohol soaked cloth produces no visible residue when wiped across the surfaces.

NOTE: For the remaining steps, See Figure 2.

Step 11: Apply a sacrificial layer of quality masking tape to the perimeter of the fairing as shown in Figure 2.

Step 12 Apply a smooth top coat of resin over the entire surface of the fairing to fill any remaining pinholes.

Step 13: While the resin is still wet, remove the sacrificial layer of masking tape applied in Step 11.

Step 14: Allow the resin to cure before proceeding.

Step 15: The top coat of resin will assist in identifying any further low spots by providing a glossy surface. Look for low spots by viewing the surface of the fairing at a low angle to a light source. The surface should appear fairly consistent. Fill any remaining low spots as described in Step 6.

Step 16: Sand the forward edge of the fairing to a feathered edge.

Step 17: Sand the surface of the fairing until only very minor irregularities (1/1000th [0.03 mm] or smaller) remain.

Step 18: Clean the surface of the fairing as described in Step 10.

Step 19: Use a roller to apply several coats of filler primer to the entire surface of the fairing.

Step 20 Allow the filler primer to cure before proceeding.

Step 21: Use fingertips to detect any minor irregularities in the fairing.

Step 22: Use fine grit (120 grit or higher) sandpaper to remove any irregularities.

Step 23: Fill any remaining low spots with additional filler primer.

Step 24: Allow the primer to cure, then sand using fine grit sandpaper and a sanding block.

Step 25: To prevent scratches, leave the plastic covering on the canopy until the aircraft is ready to fly. Use masking paper to protect the exposed canopy. Crazing may occur if any tape remains in contact with the unprotected surface of the canopy for an extended period.

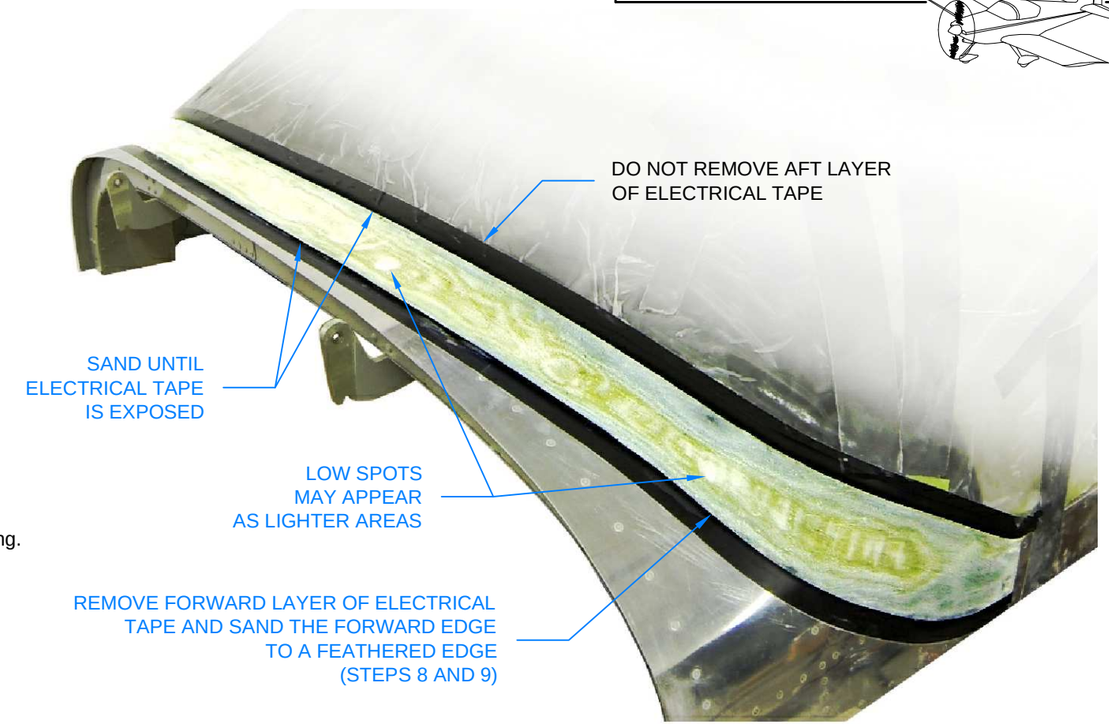

FIGURE 1: INITIAL SANDING

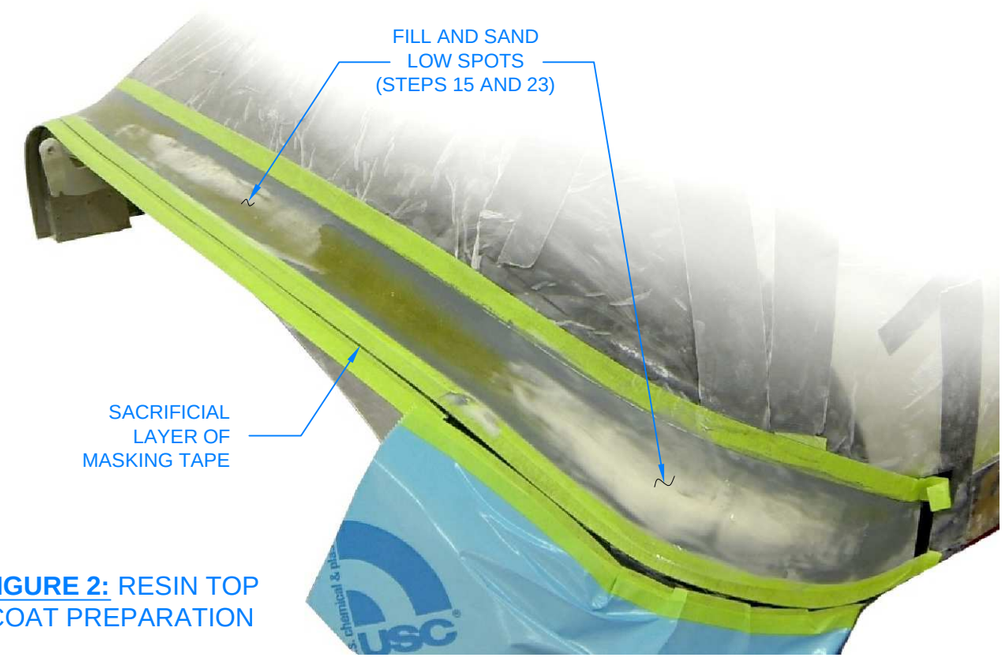

FIGURE 2: RESIN TOP COAT PREPARATION

Step 1: Install the ES-00306 Micro Switch as shown in Figure 1. Leave the nuts loose for now; the switch will be adjusted later.

Wiring, software, and installation details are provided in the Avionics Kit.

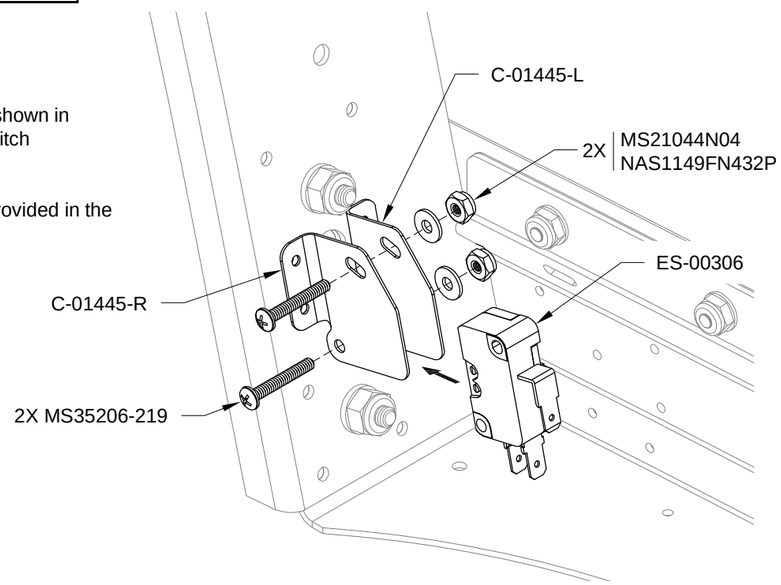

FIGURE 1: MICRO SWITCH INSTALLATION

Step 3: Cut out four 1 [25.4 mm] x 1 [25.4 mm] strips of SEAL-00006 material. From now on, these will be known as the C-01448B Thin Foam Seals.

Step 4: Cut two 1 3/4 [44.5 mm] X 11/16 [17.5 mm] strips of SEAL-00006 material. From now on, these will be known as the C-01448C Foam Seal Ends.

Step 5: Cut two 11 [279.4 mm] lengths of SEAL-00003 material. From now on, these parts will be known as the C-01448A Thick Foam Seals.

Step 6: Cut two 7/8 [22.2 mm] lengths of SEAL-00003 material. From now on, these will be known as the C-01451 Hinge Cover Assembly Seals

Step 2: Install the two ES-00056 CPU Fans (used as defog fans) as shown in Figure 2. Lightly torque the nuts to prevent cracking of the case.

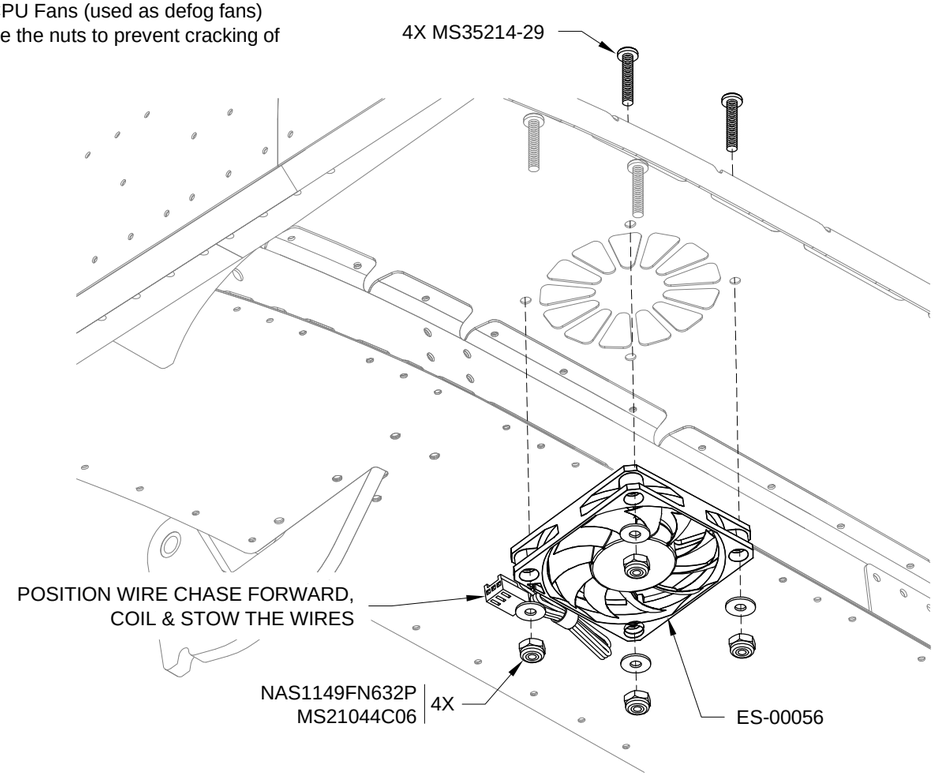

FIGURE 2: DEFOG FAN INSTALLATION

Step 1: Install the C-01450 Rear Seal as shown in Figure 1. Push the rear seal as far forward as possible, then carefully tighten the screws and nuts in "ZONE 3" as called out on Page 38-27, Figure 4. Use caution to prevent canopy cracks due to overtightening.

Step 2: Trim the bottom ends of the C-01450 Rear Seal as shown in Figure 1.

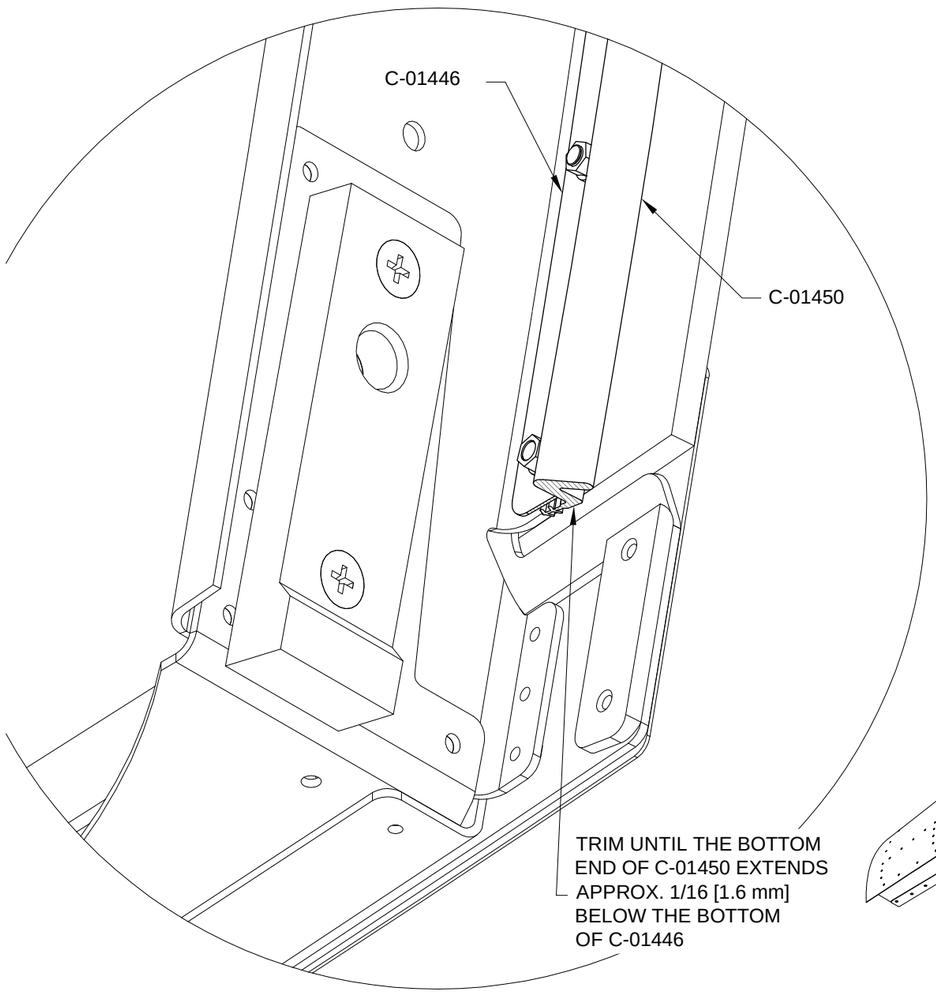

DETAIL A

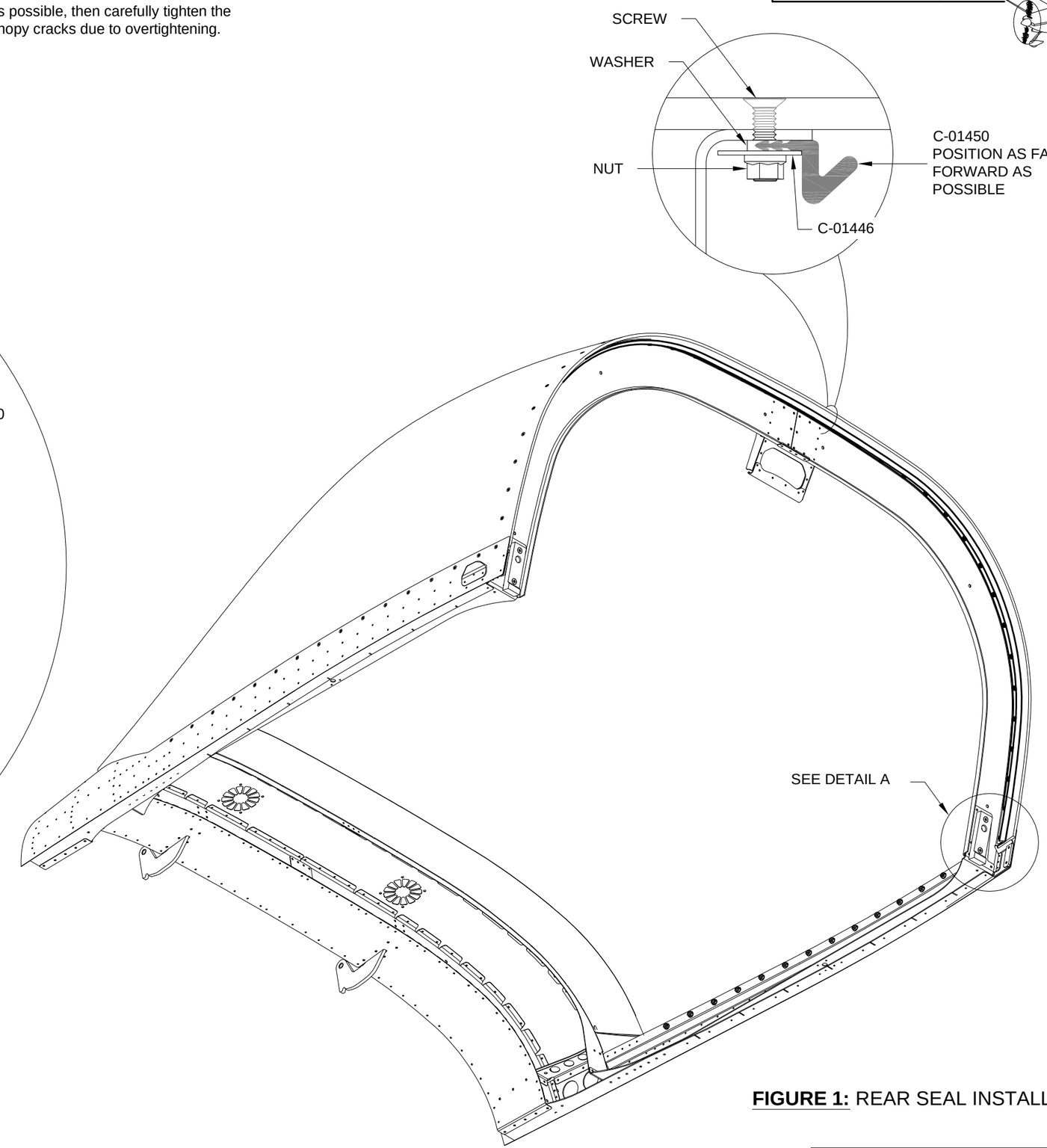

FIGURE 1: REAR SEAL INSTALLATION

Step 1: Use 80 grit sandpaper to scuff the areas where the seals will be bonded to the Canopy Frame Assembly. See Figure 1.

Step 2: Use isopropyl alcohol and a series of lint free cloths to clean the areas scuffed in Step 1. Clean until a fresh, alcohol soaked cloth produces no visible residue when wiped across the surfaces.

NOTE: Perform Steps 3-11 on both sides of the Canopy Frame Assembly before moving on to Step 12.

NOTE: Take care not to stretch any of the seals when installing.

Step 3: Without removing the adhesive backing, position the adhesive side of the C-01448A Thick Foam Seal against the forward face of the C-01402-L Forward Canopy Frame. See Figure 1 and View A-A. Position the lower end of the thick foam seal approx 1/2 in. [12.7 mm] below the bottom face of the C-01408-L Forward Canopy Rail Base.
This excess foam will be trimmed later.

Step 4: Remove approximately 2 [50.8 mm] of adhesive backing from the thick foam seal and adhere it to the C-01402-L Forward Canopy Frame as positioned in Step 3. Continue to position the thick foam seal and remove the adhesive backing as installation progresses along the C-01418 Canopy Skin.

Step 5: Trim the bottom edge of the thick foam seal flush with the bottom face of the C-01408-L Forward Canopy Rail Base.

Step 6: Remove the adhesive backing from a C-01448B Thin Foam Seal. Position and adhere the thin foam seal to the underside of the C-01448A Thick Foam Seal and the C-01408-L Forward Canopy Rail Base as shown in Figure 1 and View A-A. The excess will be trimmed later.

Step 7: Remove the adhesive backing from a second C-01448B Thin Foam Seal. Position and adhere the thin foam seal to the underside of the first thin foam seal as shown in Figure 1 and View A-A.

Step 8: Trim the C-01448B Thin Foam Seals as shown in View A-A.

Step 9: Position and adhere the C-01448C Foam Seal End around the C-01448B Thin Foam Seals and C-01448A Thick Foam Seal as shown in Figure 1. The excess will be trimmed later.

Step 10: Trim the inboard edges of the C-01448C Foam Seal End flush with the inboard surface of the C-01448A Thick Foam Seal and C-01448B Thin Foam Seals as called out in Figure 1.

Step 11: Along the top edge of the foam seal end, use a razor blade to make a 3/16 [4.8 mm] deep slit in the forward face of the thick foam seal. See Figure 1. This will allow the foam seal end and thick foam seal to compress properly when the canopy closes.

Step 12: Trim any material from the C-01447 D Seal until only the "D" shape remains. See Figure 2.

Step 13: Without removing the adhesive backing, position the C-01447 D Seal as shown in Figure 1 and View A-A. Position the ends of the D Seal approx. 1/2 in. [12.7 mm] below the bottom edge of the C-01418 Canopy Skin. This excess foam will be trimmed later.

Step 14: Remove approximately 2" [50.8 mm] of adhesive backing from the C-01447 D Seal and adhere it to the underside of the C-01418 Canopy Skin as positioned in Step 13. Continue to position the D seal and remove the adhesive backing as installation progresses along the canopy skin.

Step 15: Trim the ends of the D seal as shown in Figure 1.

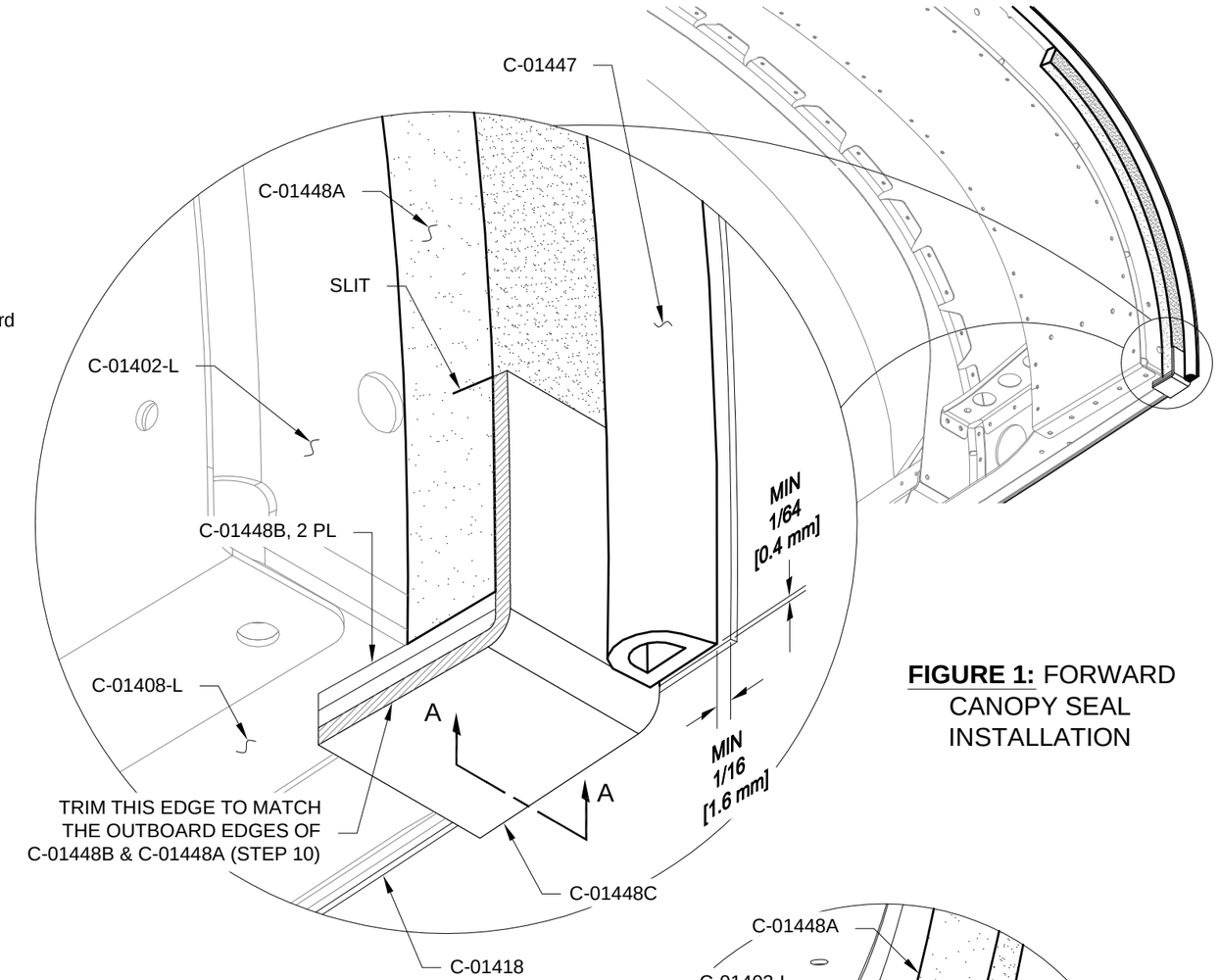

FIGURE 1: FORWARD CANOPY SEAL INSTALLATION

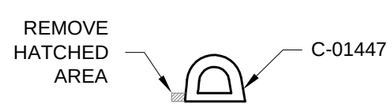

FIGURE 2: TRIM D SEAL

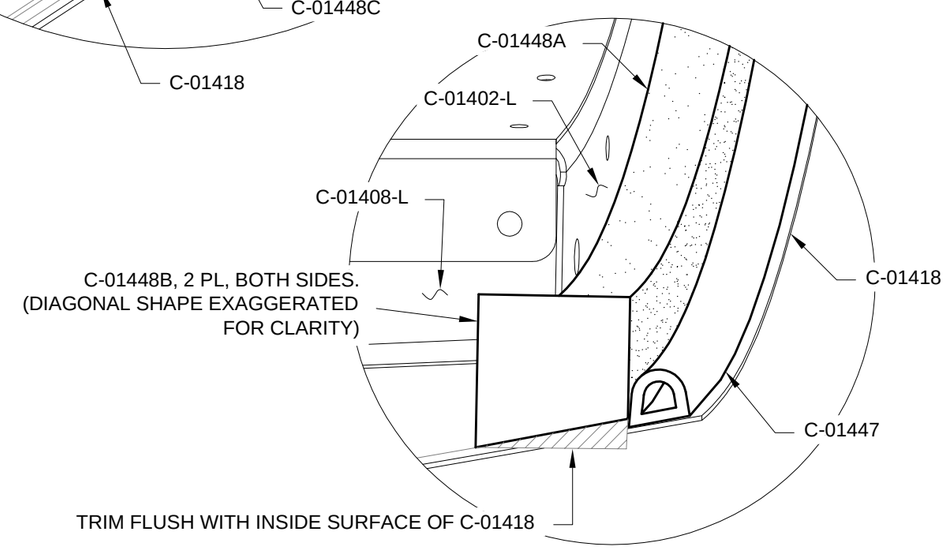

VIEW A-A
(C-01448C OMITTED FOR CLARITY)

Step 1: Cut two 41 1/4 [104.8 cm] lengths of SEAL-00001 material. From now on, these will be known as the C-01449 Side Seals.

NOTE: Perform Steps 2-6 on both sides of the Canopy Assembly.

Step 2: Use 80 grit sandpaper to scuff the areas where the side seals will be bonded to the underside of the Canopy Frame Assembly. See Figure 1 and Section A-A.

Step 3: Use isopropyl alcohol and a series of lint free cloths to clean the areas scuffed in Step 2. Clean until a fresh, alcohol soaked cloth produces no visible residue when wiped across the surfaces.

Step 4: Without removing the adhesive backing, position the forward end of the C-01449 Side Seal on the underside of the Canopy Frame Assembly as shown in Figure 1 and Section A-A. Position the forward edge of the side seal flush with the aft faces of the C-01448B Thin Foam Seals and C-01448C Foam Seal End.

Step 5: Remove approximately 2 [50.8 mm] of adhesive backing from the forward end of the C-01449 Side Seal. Adhere the side seal to the bottom of the Canopy Frame Assembly as positioned in Step 4. Continue to position the side seal and remove the adhesive backing as installation progresses aft along the bottom of the Canopy Frame Assembly.

Step 6: Trim the aft end of the C-01449 Side Seal flush with the aft edge of the C-01409-L Aft Canopy Rail Angle as shown in Figure 1.

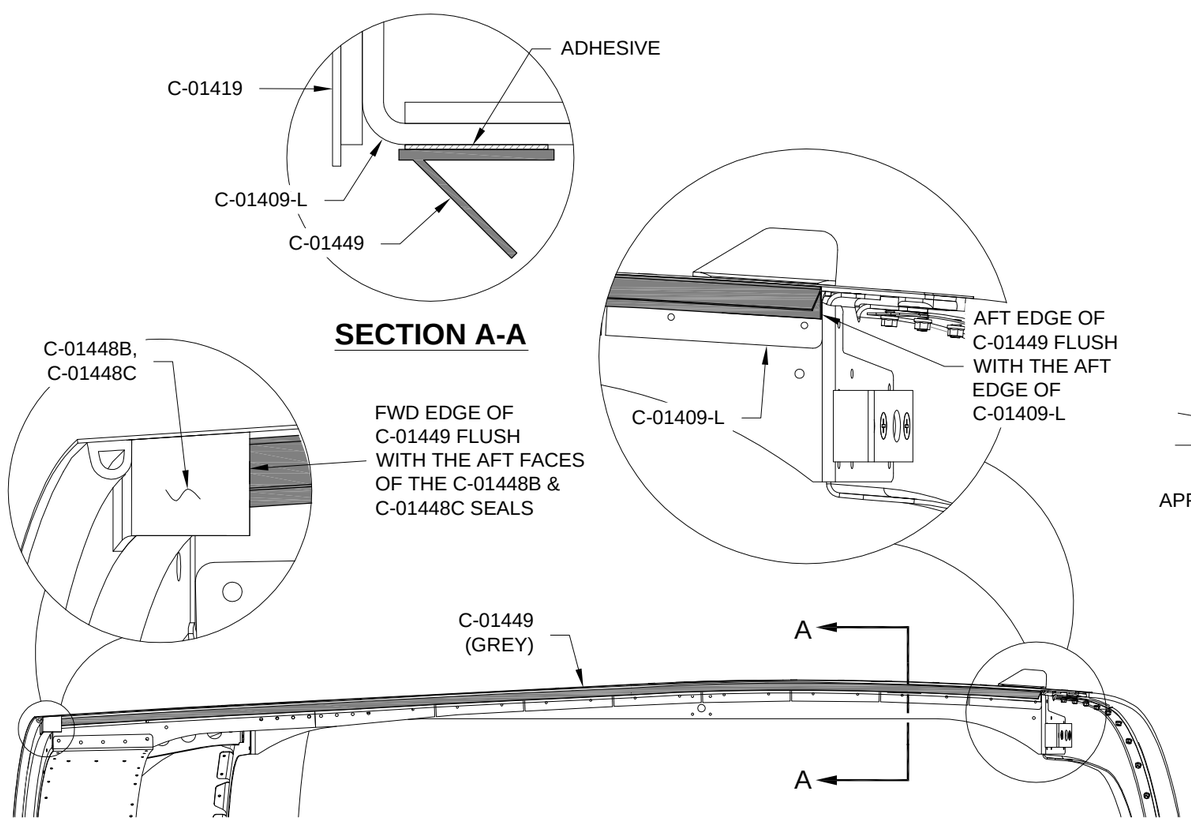

FIGURE 1: SIDE SEAL POSITION

NOTE: The F-01449A Cover Clips are manufactured from very thin material to minimize resistance during the canopy jettison process. To avoid damage, use extra caution when working with the cover clips.

Step 7: Separate the F-01449A Cover Clips as shown in Figure 2.

Step 8: Lightly deburr the F-01449A Cover Clips. Do not radius the sharp corners.

Step 9: The F-01449A Cover Clips will most likely be warped due to the manufacturing process. Use a flush head rivet set in a hand squeezer to flatten them. Use a straight edge to check for flatness.

Step 10: Machine countersink the holes in the F-01449B Hinge Covers to fit the head of an AN426AD2 rivet as shown in Figure 3.

Step 11: Rivet together two Hinge Cover Assemblies as shown in Figure 3. Under-set the rivets slightly to avoid pucker and deformation due to the thin aluminum of the F-01449A Cover Clips.

Step 12: Clamp the Hinge Cover Assemblies between two small wood blocks as shown in Figure 4.

Remove the wood blocks, drill #40 holes in the blocks where the rivet heads caused indentations, then re-clamp the blocks as shown in Figure 4.

Step 13: Use a smooth jaw (duck bill) pliers to bend the F-01449A Cover Clips upward slightly as shown in Figure 4.

Step 14: Bend the F-01449A Cover Clips downward slightly as shown in Figure 5. This will form a spring retainer for the forward end of the Hinge Cover Assemblies.

Step 15: Un-clamp the Hinge Cover Assemblies.

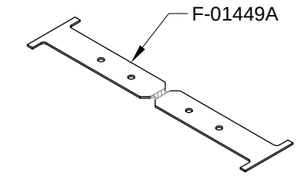

FIGURE 2: COVER CLIPS

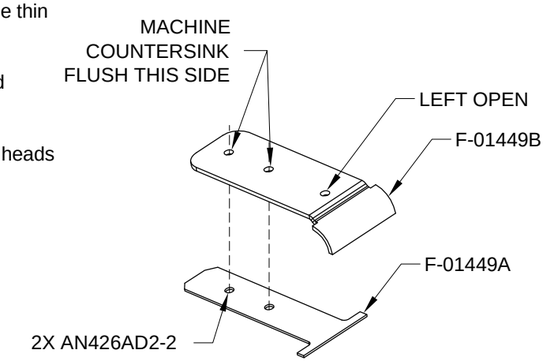

FIGURE 3: HINGE COVER ASSEMBLY

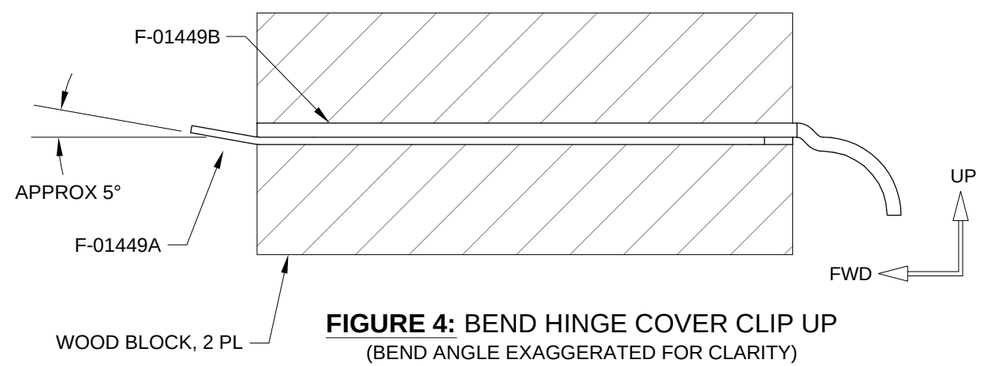

FIGURE 4: BEND HINGE COVER CLIP UP
(BEND ANGLE EXAGGERATED FOR CLARITY)

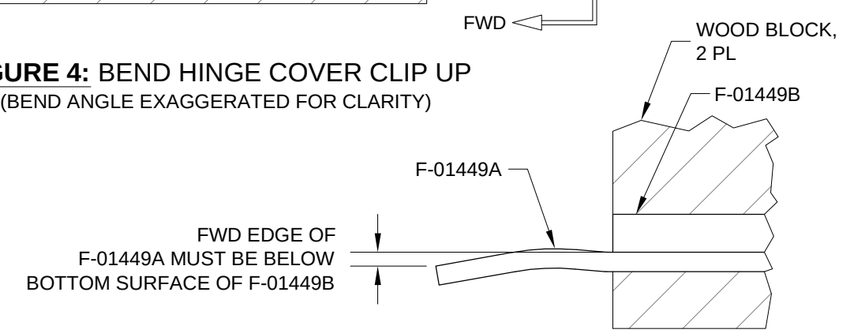

FIGURE 5: BEND HINGE COVER CLIP DOWN

Step 1: Apply masking tape along the left and right edges of the canopy hinge slots as shown in Figure 1.

Step 2: Use auto body filler to fill the voids between the F-01455 Sub Panel and C-01440 Canopy Hinge Brackets as shown in Figure 1.

Step 3: Remove the masking tape applied in Step 1. Allow the auto body filler to cure before performing Steps 7-15.

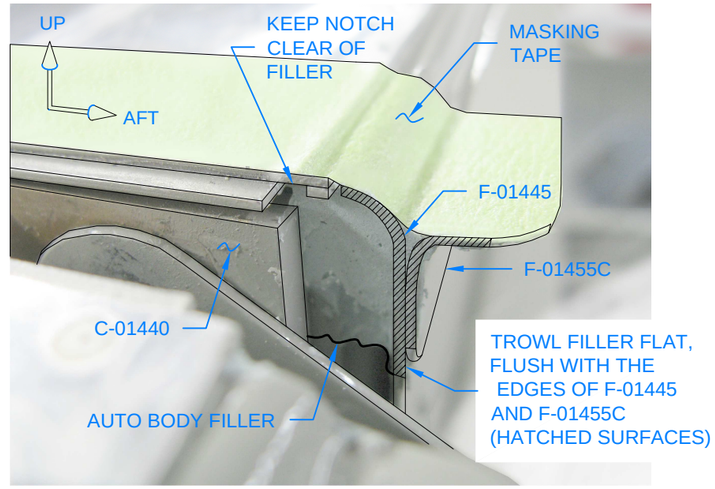

FIGURE 1: FILLING THE HINGE SEAL VOID
(4 PLACES)

Step 4: Use 80 grit sandpaper to scuff the areas where the C-01451 Hinge Cover Assembly Seals will be bonded to the Hinge Cover Assemblies. See Figure 2.

Step 5: Use isopropyl alcohol and a series of lint free cloths to clean the areas scuffed in Step 4. Clean until a fresh, alcohol soaked cloth produces no visible residue when wiped across the surfaces.

Step 6: Remove the adhesive backing from the C-01451 Hinge Cover Assembly Seals and adhere them to the Hinge Cover Assemblies as shown in Figure 2.

Step 7: Trim the hinge cover assembly seal as shown in Figure 2.

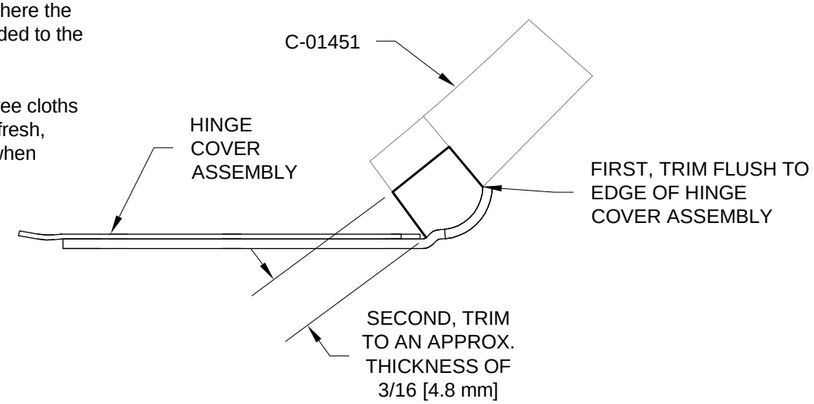

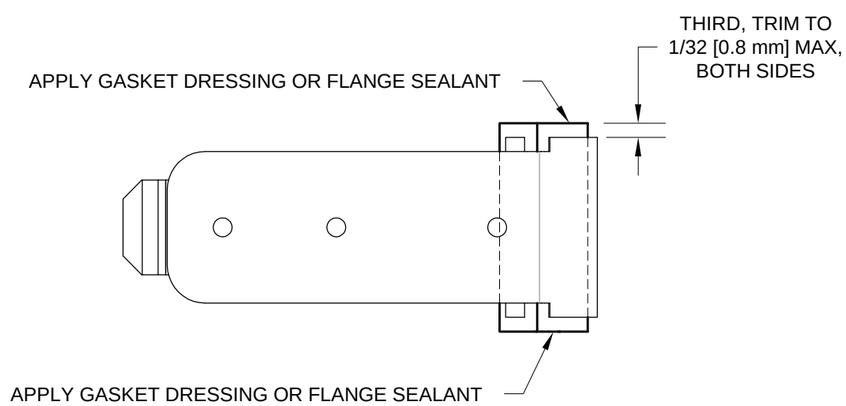

FIGURE 2: HINGE COVER ASSEMBLY SEAL

NOTE: Install the Hinge Cover Assemblies only after final canopy installation.

Step 8: Apply a thin layer of non-hardening, non-setting flange gasket dressing or flange sealant (such as Permatex #85420) to the areas called out in Figure 3, and the left and right faces of the hinge cover assembly seal. See Figure 2.

Step 9: With the canopy fully opened, slide the forward end of the Hinge Cover Assembly into position as far forward as possible without deflecting the spring bent on Page 38-35, Steps 13-14.

Step 10: Position the canopy in the "Taxi/Vent" position (the bottom of the Canopy Frame Assembly resting on top of the C-01426 Canopy Latch Pins)

Step 11: Insert a 1/16 diameter pin punch through the open hole in the Hinge Cover Assembly, then carefully deflect the F-01449A Cover Clip downward by approx. 1/16 in. [1.6 mm]. See Figure 3.

CAUTION: Excessive deflection of the F-01449A Cover Clip will diminish the clip's ability to lock the Hinge Cover Assembly in place.

Step 12: Slide the Hinge Cover Assembly forward while deflecting the cover clip until the Hinge Cover Assembly completely seals the opening.

Step 13: Remove the pin punch, allowing the cover clip to seat into the notch.

Step 14: Verify that the Hinge Cover Assembly is locked into position by attempting to slide it aft without deflecting the cover clip.

Step 15: Install the second Hinge Cover Assembly as described previously.

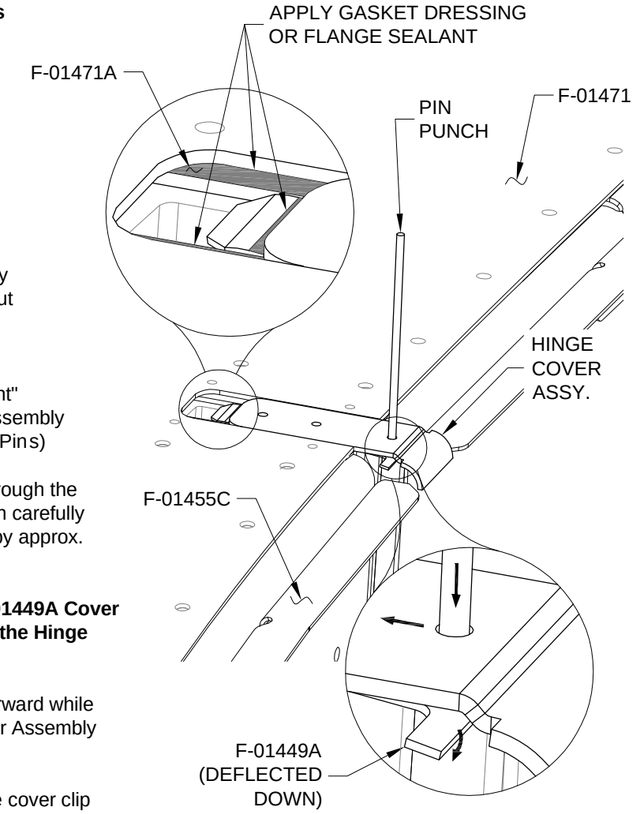

FIGURE 3: INSTALL HINGE COVER ASSEMBLY
(LEFT SIDE SHOWN, CANOPY & HINGE COVER ASSEMBLY SEAL OMITTED FOR CLARITY)

Step 16: Wipe the tops of the Hinge Cover Assemblies with isopropyl alcohol to remove any excess flange sealant.

CAUTION: When opening and closing the canopy for the first time after installing the Hinge Cover Assemblies, move the canopy very slowly and check for any interference between the Hinge Cover Assemblies and the surrounding structure as the canopy rotates.

NOTE: Perform the following steps on both sides of the fuselage after final canopy installation.

NOTE: Extend the C-01426 Canopy Latch Pins as required to keep the canopy from fully closing: this will prevent the C-01453 Guide Pins from damaging the F-01421B-L & -R Aft Canopy Deck.

Step 1: Cleco, then rivet the C-01453 Guide Pin to the C-01427-L Aft Canopy Rail Flange* as shown in Figure 1.

Step 2: Lower the canopy and note the approximate location where the tip of the C-01453 Guide Pin contacts the F-01421B-L Aft Canopy Deck.

Open the canopy and smooth a lump of modeling clay onto the canopy deck at the guide pin contact point. See Figure 2.

Step 3: Lower the canopy until the tip of the C-01453 Guide Pin contacts the canopy deck and forms a depression in the clay as shown in Figure 2.

Step 4: Mark a dot on the canopy deck at the forward edge of the depression with the tip of a fine point permanent marker. See Figure 2.

Step 5: Strike the center of the dot with a center punch as shown in Figure 3.

Step 6: Drill #52 (or 1/16) the dot where it was struck by the center punch.

Step 7: Remove the clay from the canopy deck.

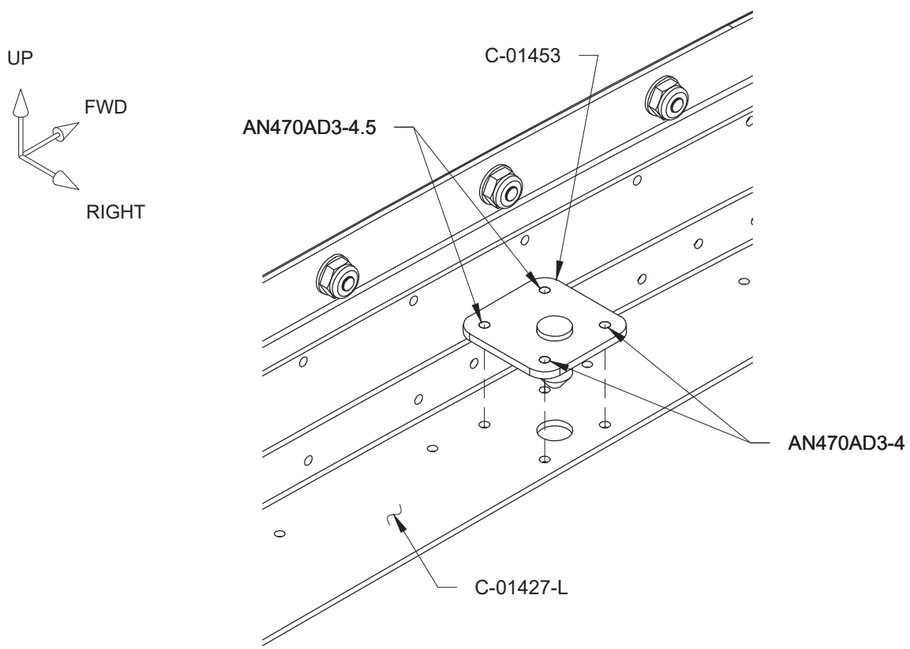

FIGURE 1: GUIDE PIN INSTALLATION

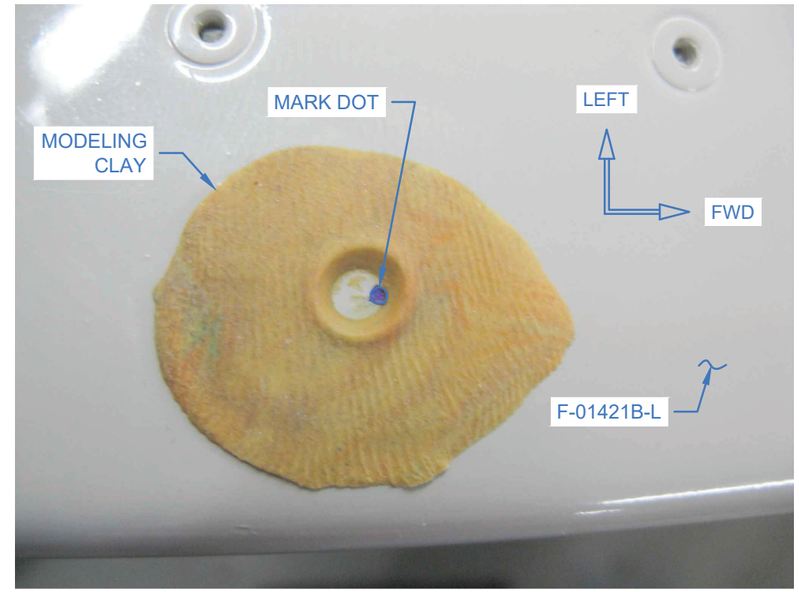

FIGURE 2: MODELING CLAY

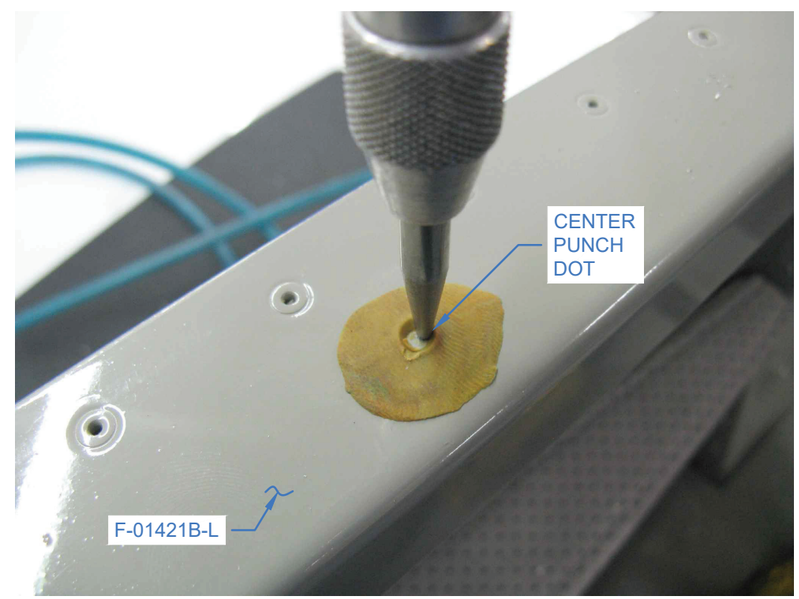

FIGURE 3: CENTER PUNCH

NOTE: Perform the following steps on both sides of the fuselage after final canopy installation.

Step 1: Tape the guide plate template found on Page 38-41, Figure 4, to the F-01421B-L Aft Canopy Deck as shown in Figure 1. Align the edge of the template parallel with the inboard face of the canopy deck. Align the template center point with the #52 hole.

Step 2: Securely tape the C-01454 Guide Plate over the template as shown in Figure 2.

Step 3: Match-Drill #30 the holes in the guide plate into the canopy deck as shown in Figure 2. Cleco the first hole before drilling the second.

Step 4: Remove the guide plate and template from the canopy deck.

Step 5: Final-Drill #30 the #52 (or 1/16) center hole in the canopy deck.

Step 6: Use a step drill to enlarge the #30 center hole drilled in the previous step to 1/2.

Step 7: Machine countersink the #30 holes in the guide plate as shown in Figure 3.

Step 8: Cleco, then rivet the guide plate to the canopy deck as shown in Figure 3.

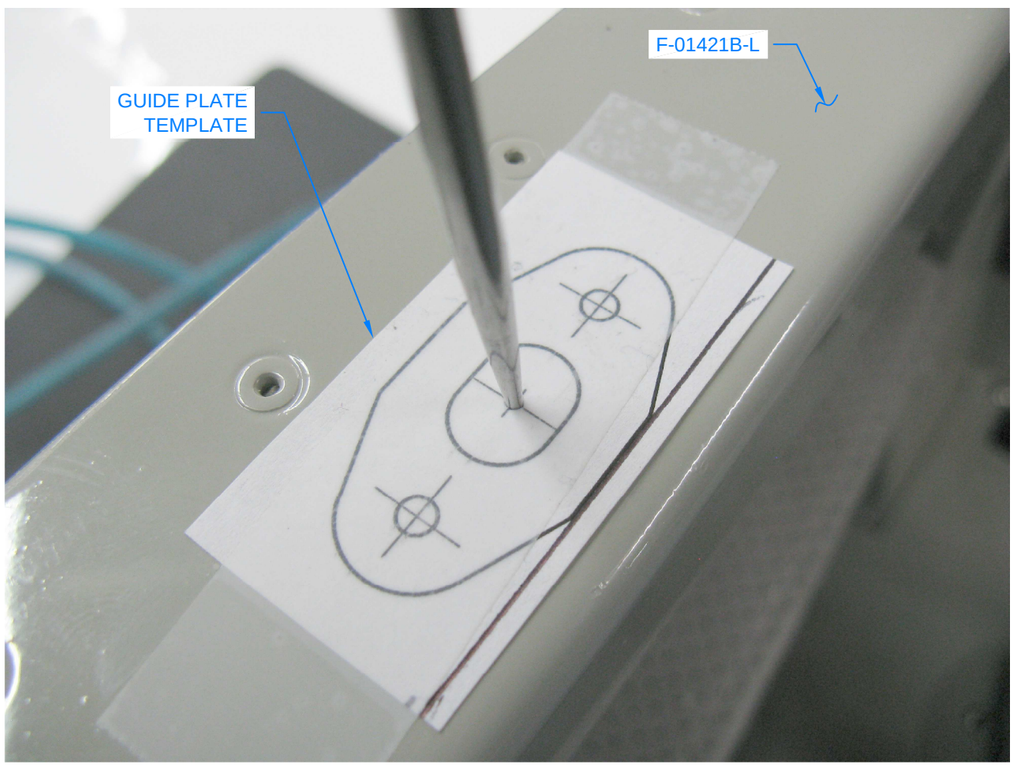

FIGURE 1: GUIDE PLATE TEMPLATE

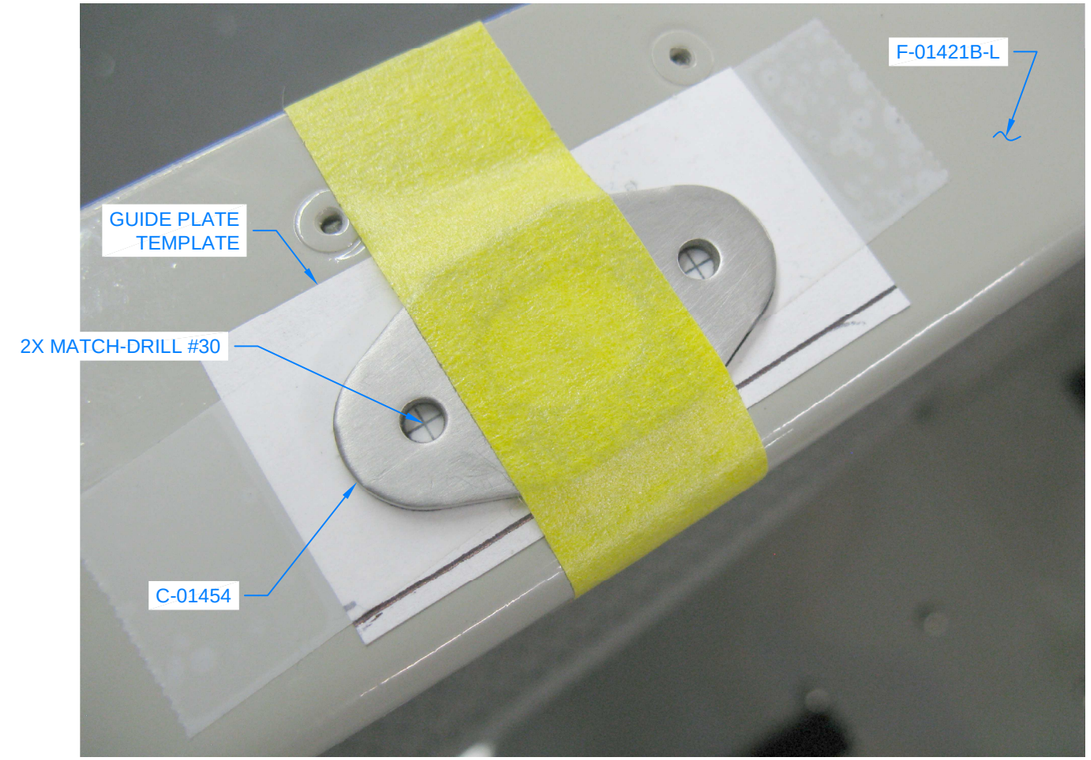

FIGURE 2: TAPE GUIDE PLATE

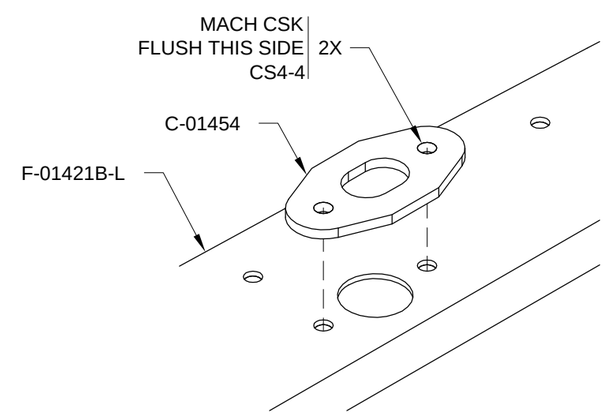

FIGURE 3: GUIDE PLATE INSTALLATION

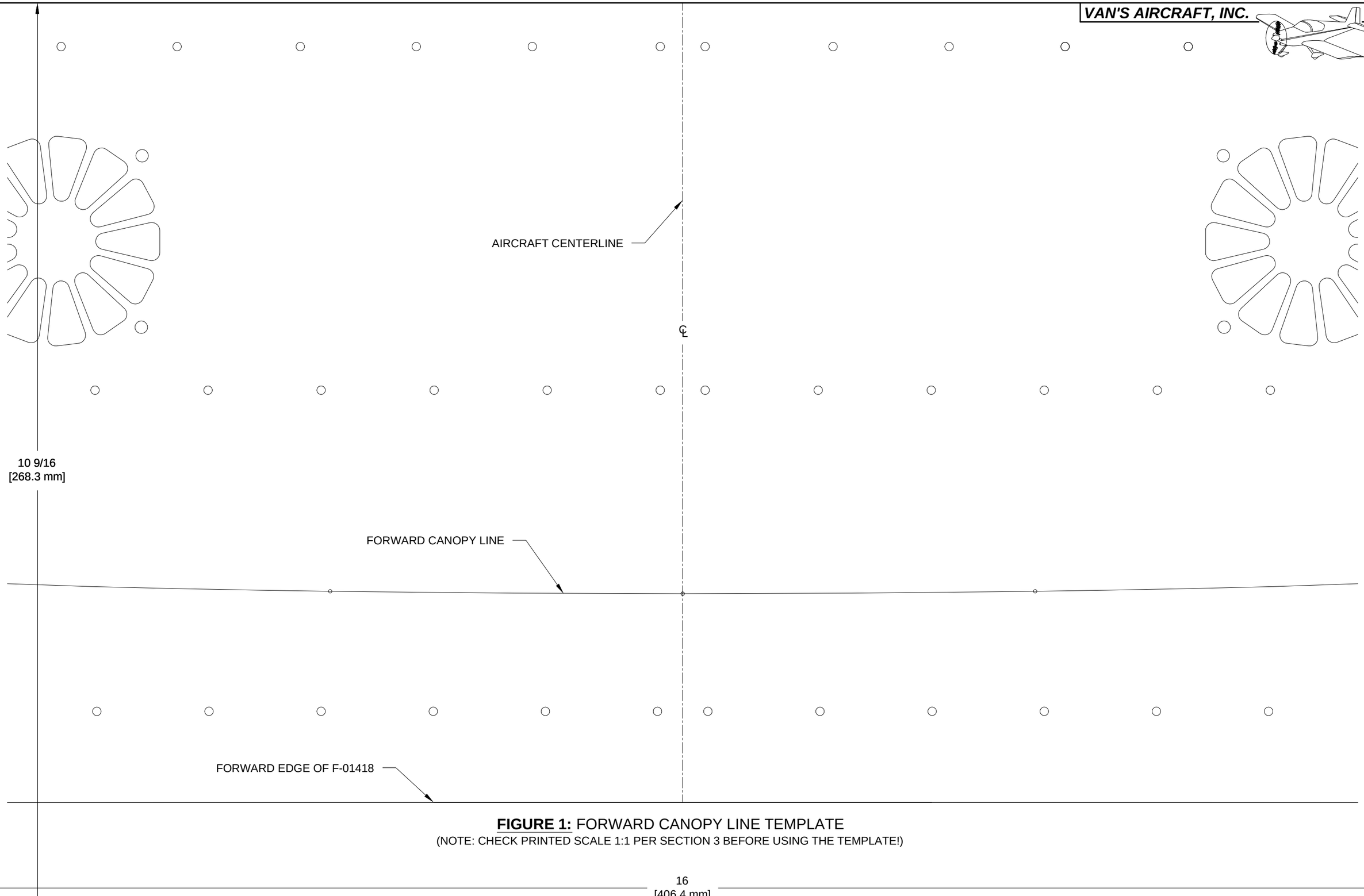

FIGURE 1: FORWARD CANOPY LINE TEMPLATE

(NOTE: CHECK PRINTED SCALE 1:1 PER SECTION 3 BEFORE USING THE TEMPLATE!)

THIS PAGE INTENTIONALLY LEFT BLANK

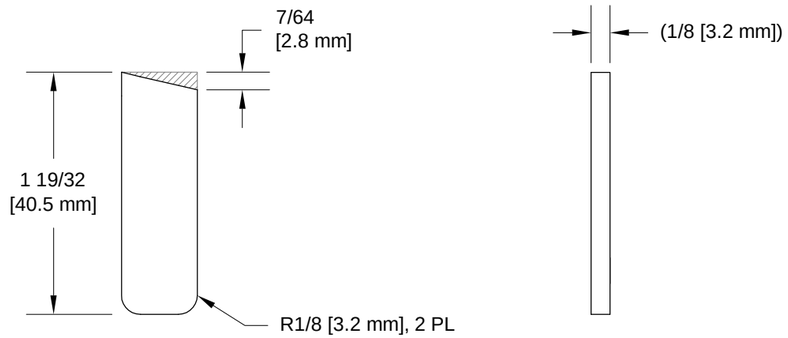

FIGURE 1: CANOPY WEAR STRIP TEMPLATE
(NOTE: CHECK PRINTED SCALE 1:1 PER SECTION 3 BEFORE USING THE TEMPLATE!)

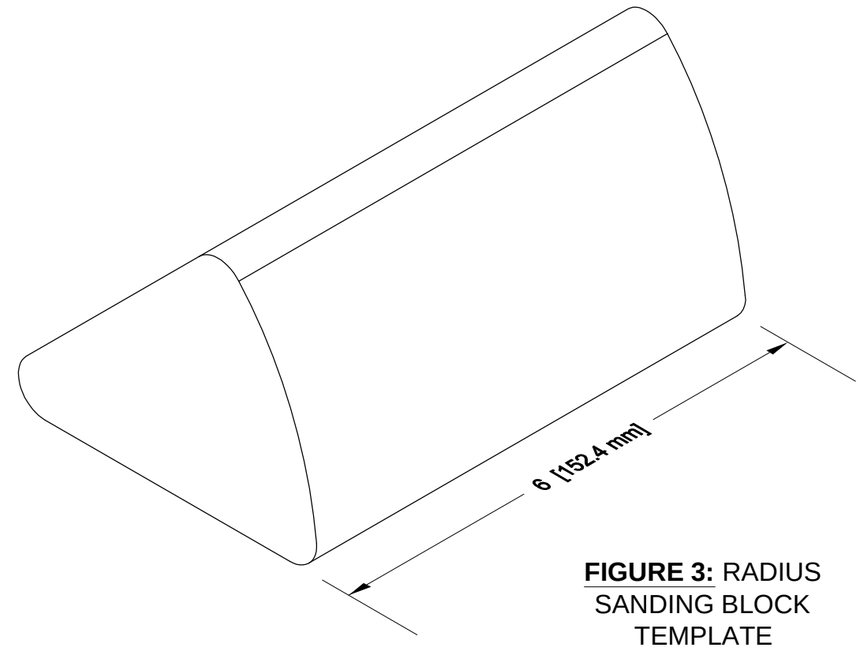

FIGURE 3: RADIUS SANDING BLOCK TEMPLATE
(NOTE: CHECK PRINTED SCALE 1:1 PER SECTION 3 BEFORE USING THE TEMPLATE!)

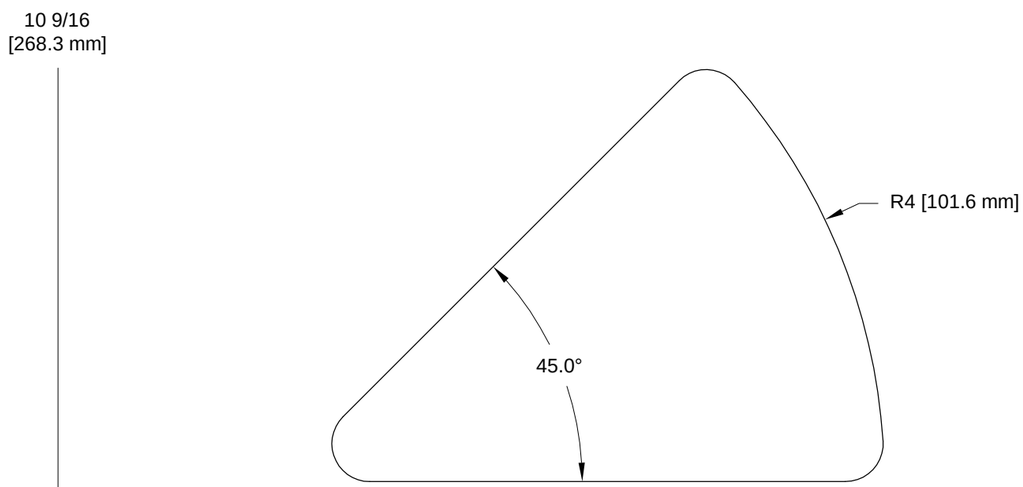

FIGURE 2: RADIUS GAUGE TEMPLATE
(NOTE: CHECK PRINTED SCALE 1:1 PER SECTION 3 BEFORE USING THE TEMPLATE!)

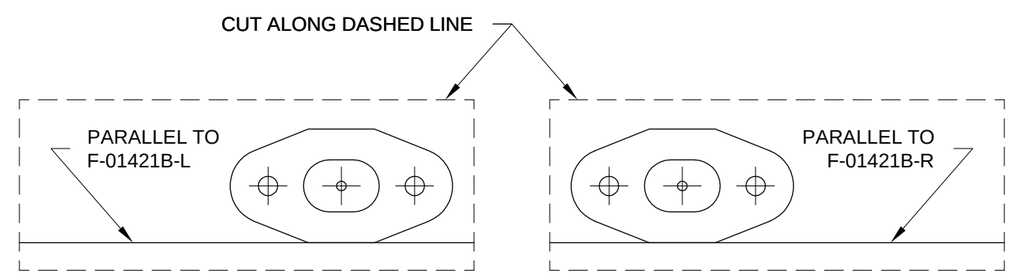

FIGURE 4: GUIDE PLATE TEMPLATES
(NOTE: CHECK PRINTED SCALE 1:1 PER SECTION 3 BEFORE USING THE TEMPLATE!)

16
[406.4 mm]

THIS PAGE INTENTIONALLY LEFT BLANK