SECTION 31: FUEL SYSTEM

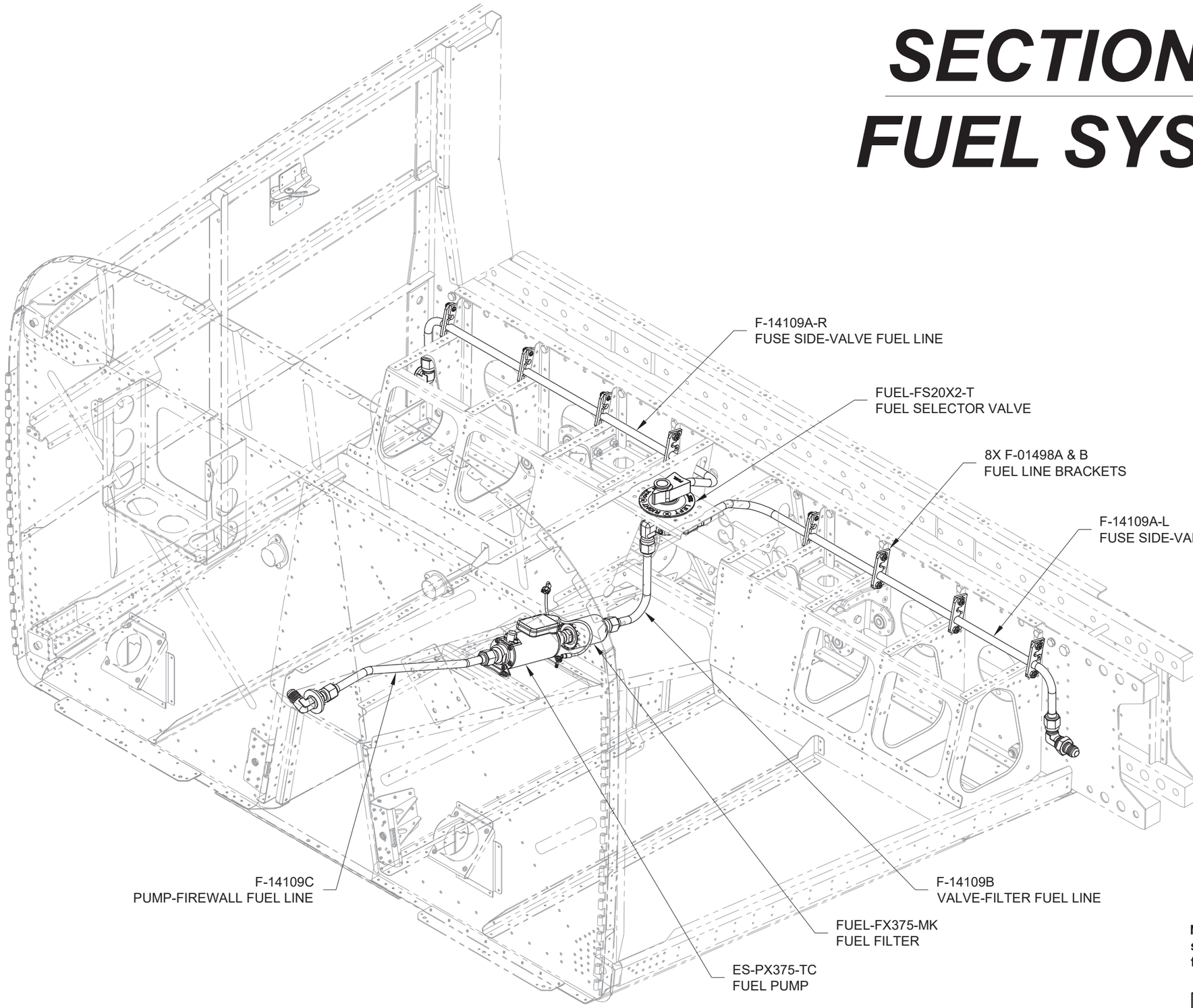

NOTE: Special tools required to complete this section include a short 11/16 wrench or crow's foot and a tube bender.

DATE OF COMPLETION: _____

PARTICIPANTS: _____

Step 1: Separate the eight F-01498 Fuel Line Brackets as shown in Figure 1.

Step 2: Fabricate a wedge tool as described in Section 5.4 from a scrap of VA-140 Trailing Edge.

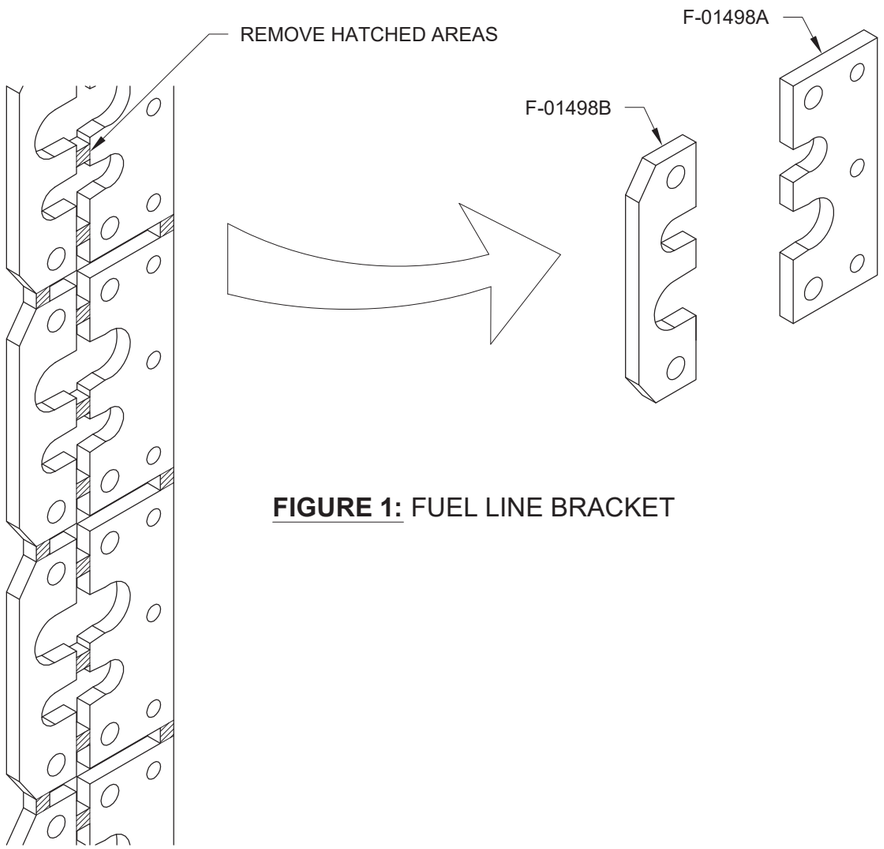

FIGURE 1: FUEL LINE BRACKET

Step 3: Rivet the eight F-01498A Fuel Line Brackets to the F-01438-L & -R Cover Ribs as shown in Figure 2. Use the wedge tool as required. The larger slot in each fuel line bracket must be on the bottom.

For the two middle brackets, place the manufactured head of the rivet against the bracket and create the shop head against the cover rib.

For the inboard and outboard brackets, place the manufactured head of the rivet against the cover rib and create the shop head against a washer (so that the washer protects the bracket). See Figure 2.

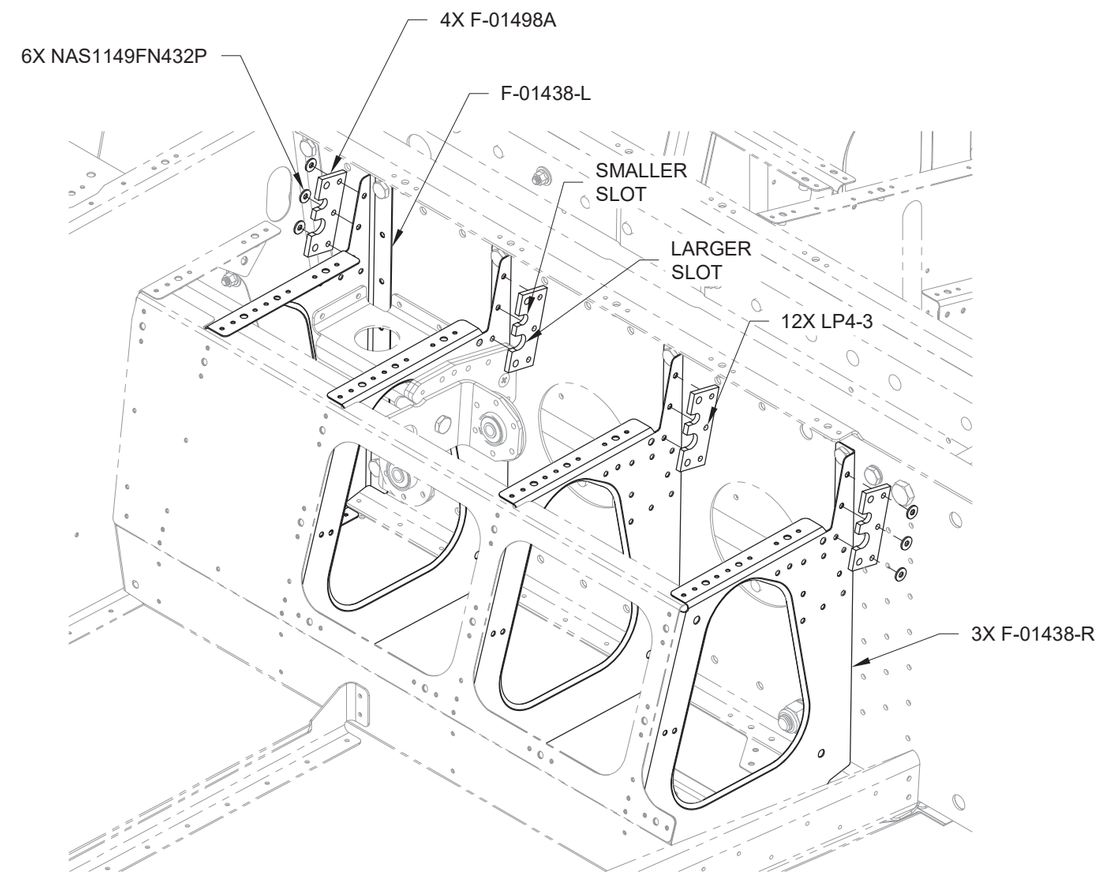

FIGURE 2: ATTACH FUEL LINE BRACKETS
(LEFT SIDE SHOWN, RIGHT SIDE IS MIRROR IMAGE)

Step 1: Read and follow the manufacturer's instructions for the FUEL-FS20X2-T Fuel Selector Valve.

Step 2: Remove the lever from the fuel selector valve. See Figure 2.

Step 3: Use the screws supplied with the fuel selector valve to attach the elbow fittings as shown in Figure 1. Secure the screws according to the manufacturer's instructions.

Step 4: Rivet the nutplates to the valve body as shown in Figure 1.

Step 5: Machine countersink the faceplate of the fuel selector valve to fit the screws as shown in Figure 2.

Step 6: Attach the valve body and faceplate to the F-14102 Fuel Selector Valve Bracket as shown in Figure 2.

NOTE: Avoid rotating the FUEL-FS20X2-T Fuel Selector Valve until there is fuel in the system.

Step 7: Reattach the lever to the fuel selector valve.

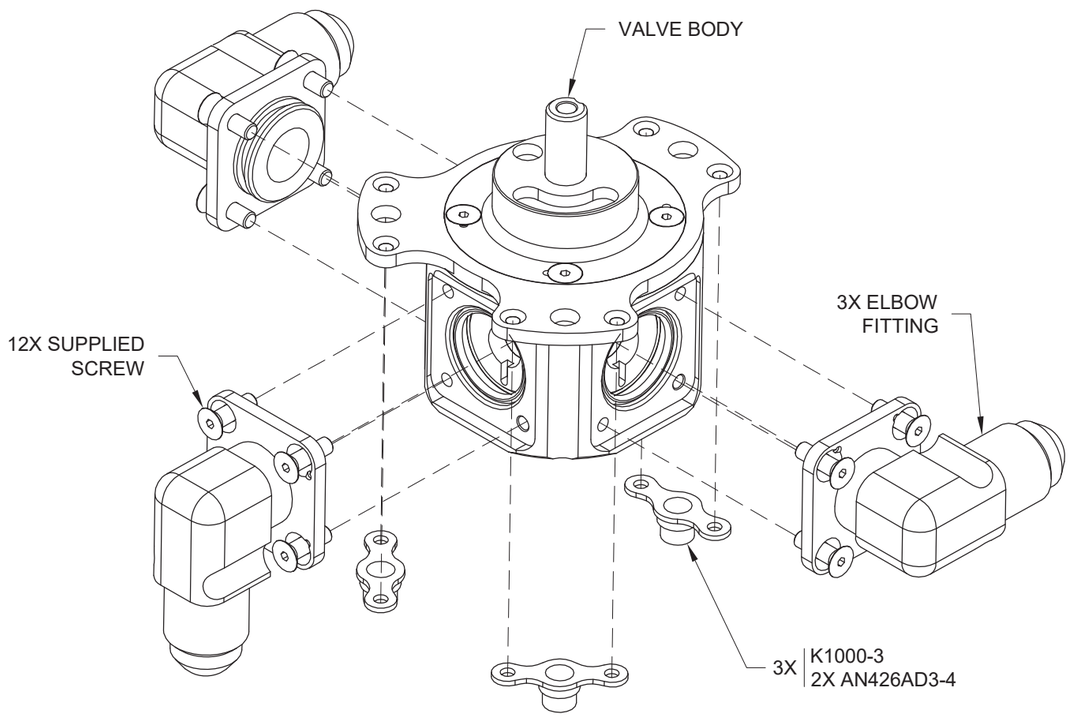

FIGURE 1: FUEL SELECTOR VALVE

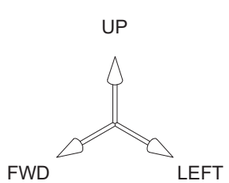

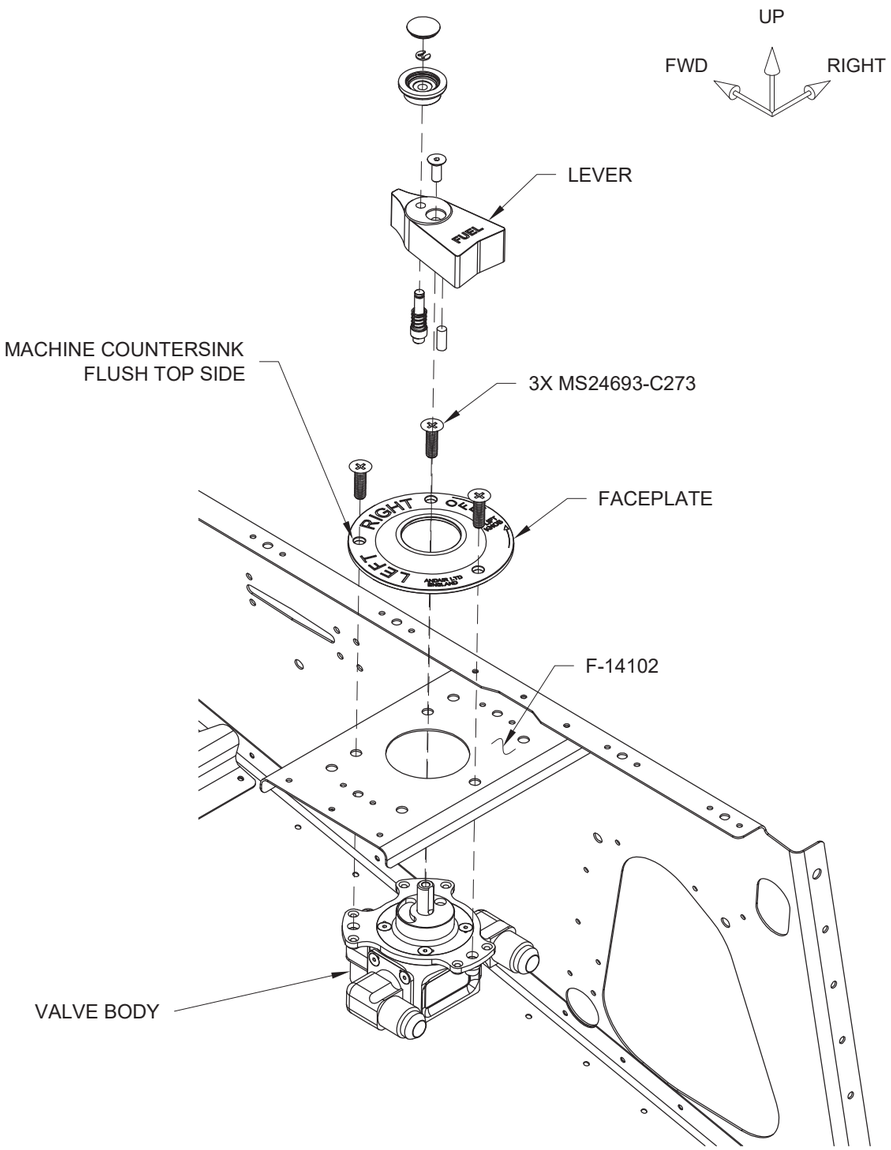

FIGURE 2: INSTALL FUEL SELECTOR VALVE

WARNING: Not all fuel types are approved for use with this pump. For a list of approved fuels see the latest information on the Andair website.

Step 1: Trim the black wire coming from the ES-PX375-TC Fuel Pump as indicated in Figure 1.

Step 2: Crimp on a ring terminal and female spade connector to the black and red ES-PX375-TC Fuel Pump wires, respectively. See Figure 1.

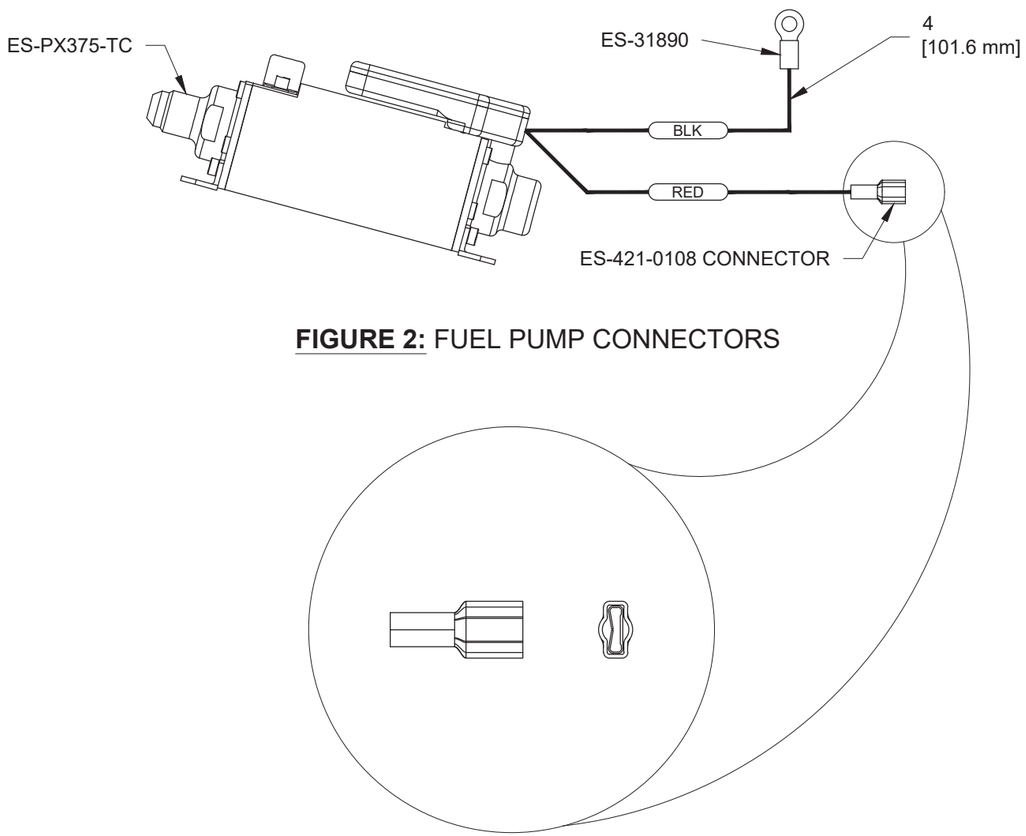

FIGURE 2: FUEL PUMP CONNECTORS

Step 3: Apply pipe thread sealant to the 1/4 NPT threads of the FUEL-FX375-MK Fuel Filter.

Step 4: Thread the FUEL-FX375-MK Fuel Filter into the 1/4 NPT end of the ES-PX375-TC Fuel Pump.

Step 5: Attach the ES-PX375-TC Fuel Pump to the F-14108A and F-14108B Fuel Pump Brackets as shown in Figure 3. Place the ring terminal end of the black fuel pump ground wire between the fuel pump bracket and the screw head.

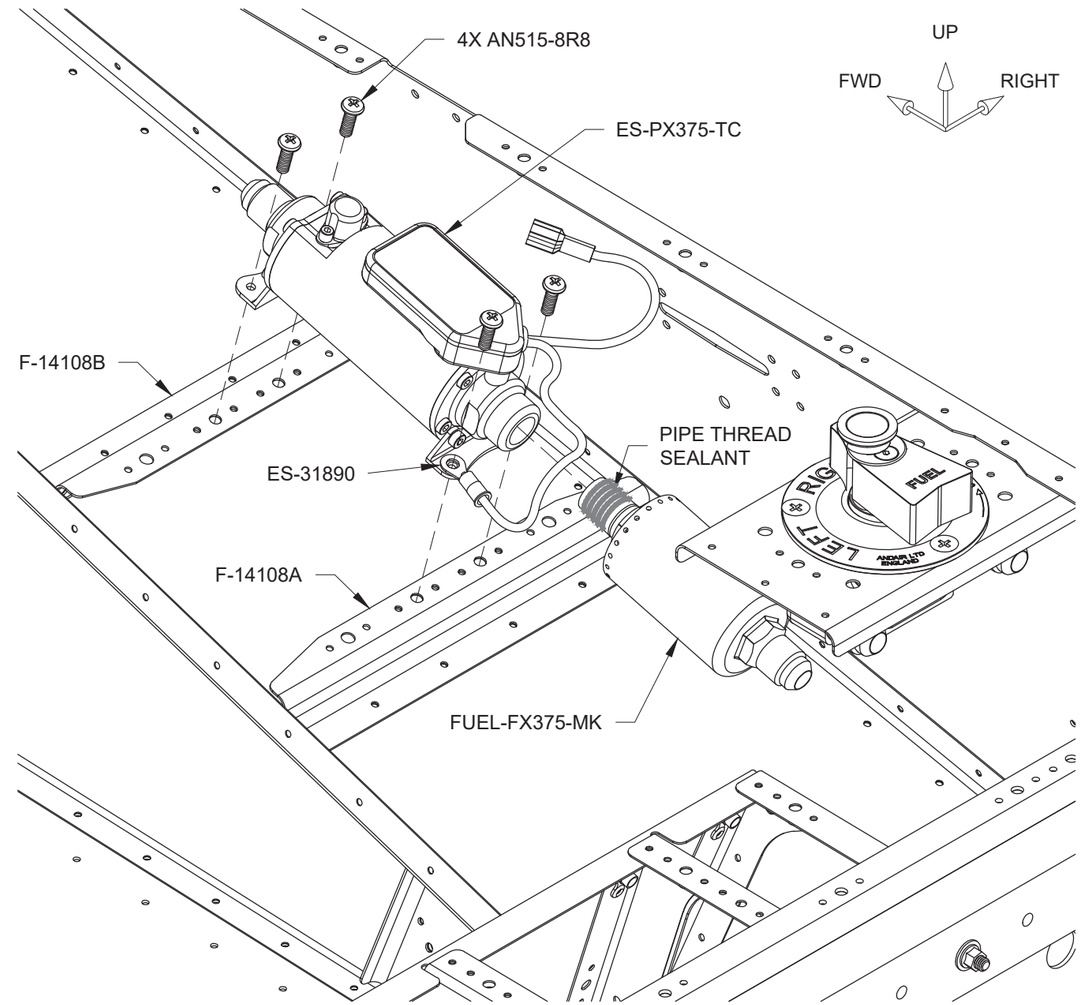

FIGURE 3: INSTALL FUEL PUMP AND FILTER

Step 1: Apply fuel tank sealant to the flange of an elbow fitting where it will mate with the forward face of the F-01401C Firewall Center as shown in Figure 1.

Step 2: Install the elbow fitting through the hole in the F-01401C Firewall Center as shown in Figure 1.

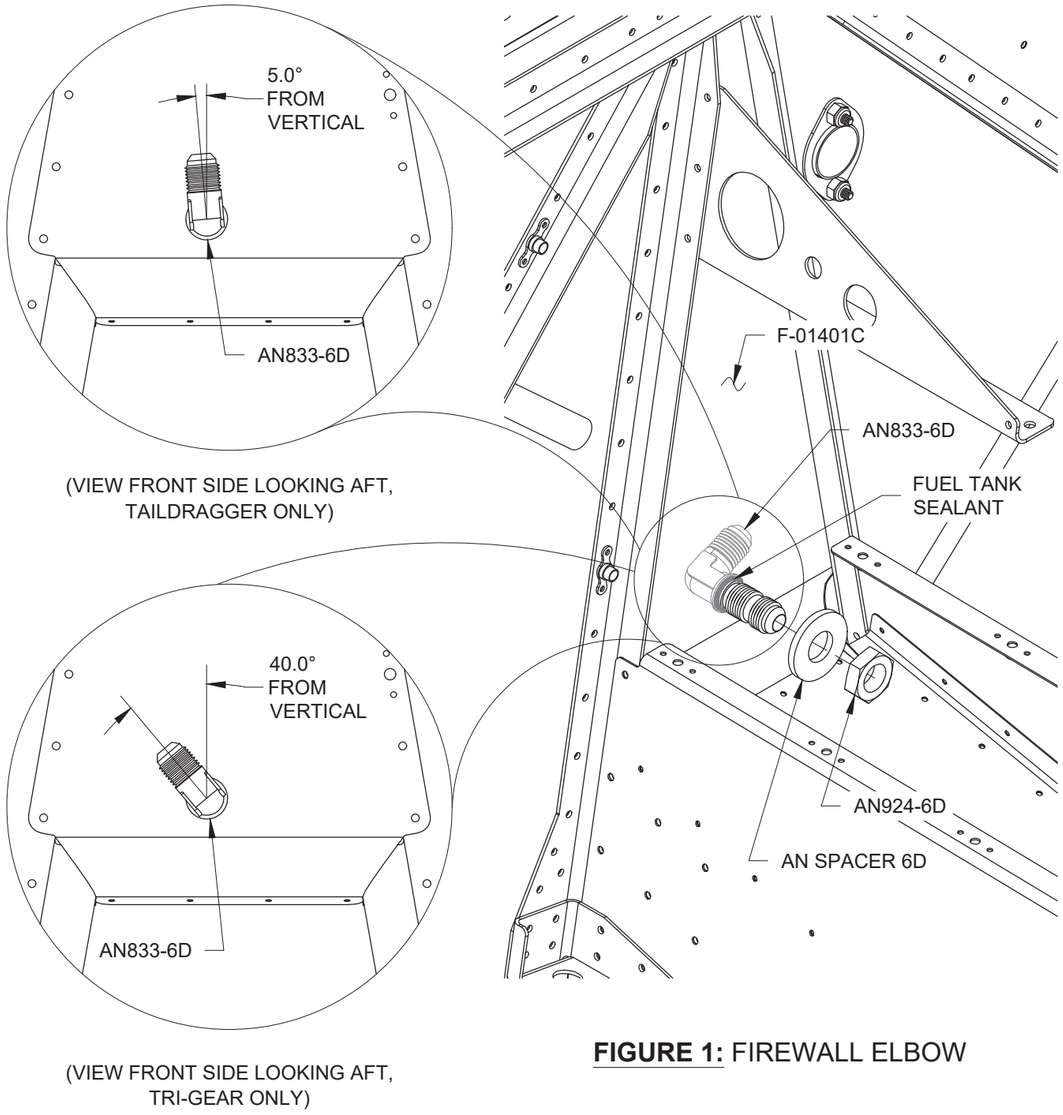

FIGURE 1: FIREWALL ELBOW

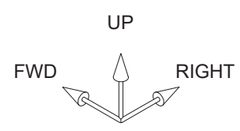

Step 3: Install two elbows through the holes in the F-01470-L & -R Fuselage Side Skins as shown in Figure 2. Elbows are clocked vertically. **DO NOT** fully tighten nuts at this time.

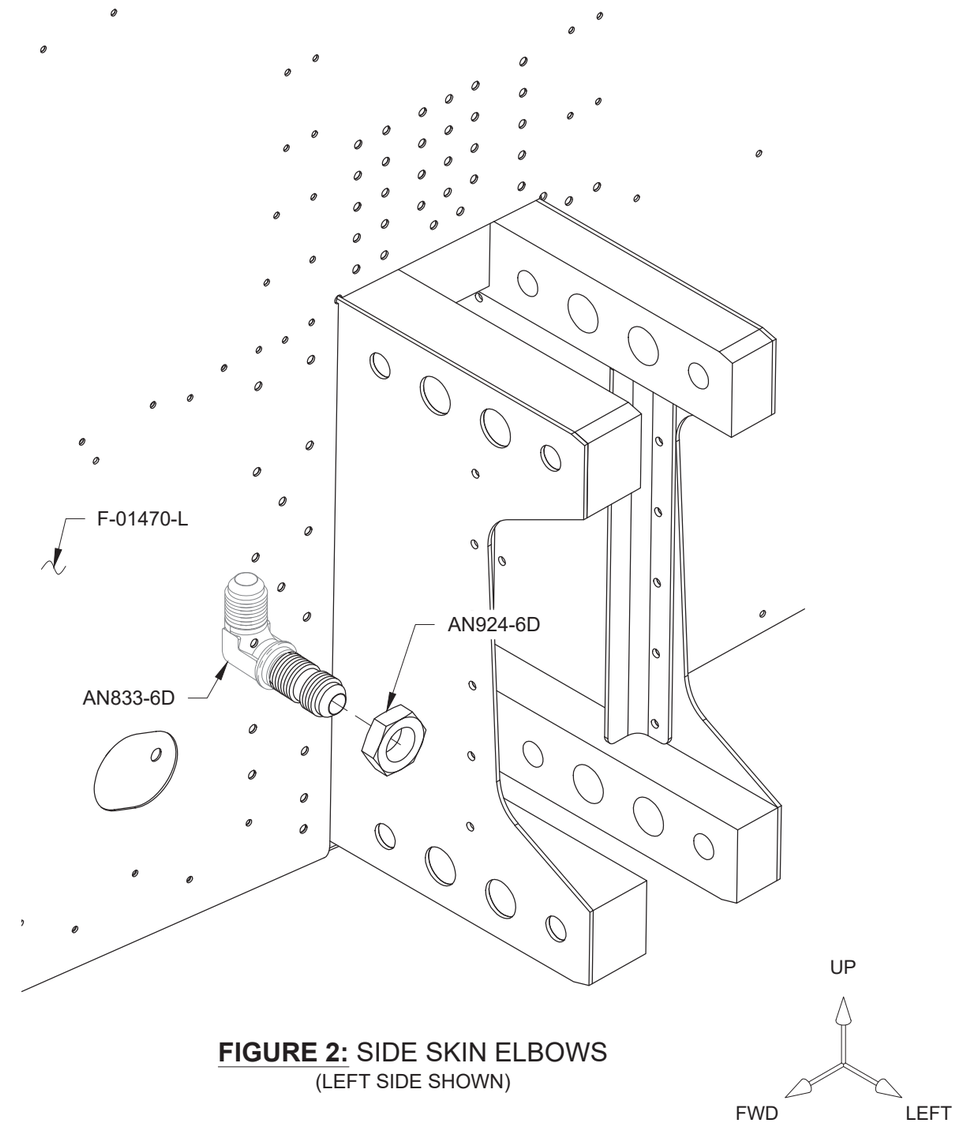

FIGURE 2: SIDE SKIN ELBOWS
(LEFT SIDE SHOWN)

NOTE: The tubing length dimensions given in this section assume an extension of the tubing 0.100 [2.5 mm] beyond the start of the flare and a 1 inch radius to the centerline of the bend. See Figure 1.

NOTE: Refer to Section 5.14 for tips on bending and flaring aluminum tubing.

Step 1: Straighten approximately 60 [1524 mm] of AT0-035X3/8 Aluminum Tubing. Unrolling the tubing against a flat surface works well.

Step 2: Cut two 27 [685.8 mm] lengths from the straightened tubing. Set one length aside for use later in this section.

Step 3: Fabricate the F-14109A-L Fuse Side-Valve Fuel Line as follows:

Flare one end of the 27 [685.8 mm] length of tubing.

Install a sleeve and coupling nut on the flared end by sliding them from the unflared end.

Place the aluminum tubing over the right side view in Figure 2 and mark the start of the **first** bend as shown. Bend the aluminum tubing approximately 28.3° until it matches the right side view in Figure 2.

Place the aluminum tubing over the right side view in Figure 2 and mark the start of the **second** bend as shown. Bend the aluminum tubing approximately 90.0° until it matches the top view and front view in Figure 2.

Measure from the centerline of the aluminum tubing and mark the start of the **third** bend as shown in the front view of Figure 2. Bend the aluminum tubing approximately 90.0° until it matches the front view.

Place the aluminum tubing over the front view in Figure 2 and mark the final trim line as shown. Trim the end of the aluminum tubing so that it matches the front view.

Install a sleeve and coupling nut on the unflared end.

Flare the unflared end of the aluminum tubing.

Step 4: Clean/smooth the ends of the F-14109A-L Fuse Side-Valve Fuel Line. Remove any debris from inside the fuel line with compressed air.

Step 5: Inspect the fuel line for debris and acceptable flaring. Refer to Section 5.14.

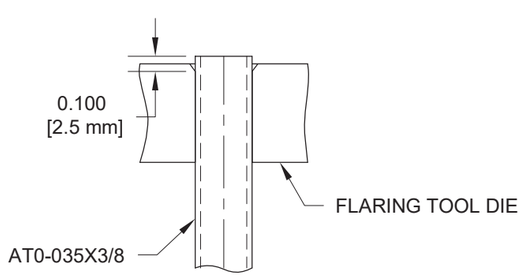

FIGURE 1: FLARING TOOL INSERTION

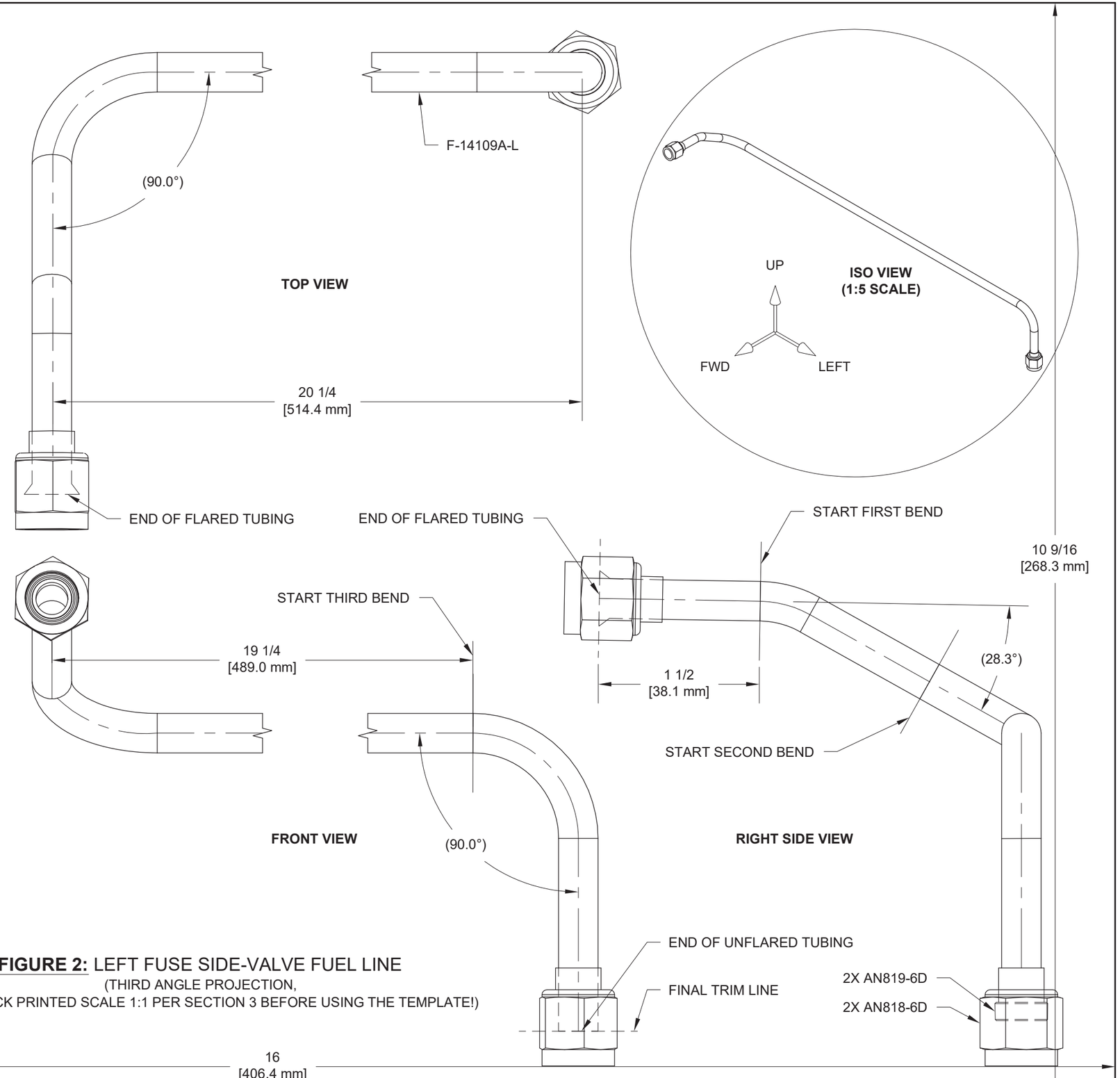

FIGURE 2: LEFT FUSE SIDE-VALVE FUEL LINE
(THIRD ANGLE PROJECTION,
NOTE: CHECK PRINTED SCALE 1:1 PER SECTION 3 BEFORE USING THE TEMPLATE!)

NOTE: The F-14109A-R Fuse Side-Valve Fuel Line is a mirror image of the F-14109A-L Fuse Side-Valve Fuel Line. See Page 31-01.

Step 1: Fabricate the F-14109A-R Fuse Side-Valve Fuel Line from the previously-cut 27 [685.8 mm] length of AT0-035X3/8 Aluminum Tubing as follows:

Flare one end of the 27 [685.8 mm] length of tubing.

Install a sleeve and coupling nut on the flared end by sliding them from the unflared end.

Place the aluminum tubing over the right side view in Figure 1 and mark the start of the **first** bend as shown. Bend the aluminum tubing approximately 28.3° until it matches the right side view in Figure 1.

Place the aluminum tubing over the right side view in Figure 1 and mark the start of the **second** bend as shown. Bend the aluminum tubing approximately 90.0° until it matches the top view and front view in Figure 1.

Measure from the centerline of the aluminum tubing and mark the start of the **third** bend as shown in the front view in Figure 1. Bend the aluminum tubing approximately 90.0° until it matches the front view.

Place the aluminum tubing over the front view in Figure 1 and mark the final trim line as shown. Trim the end of the aluminum tubing so that it matches the front view.

Install a sleeve and coupling nut on the unflared end.

Flare the unflared end of the aluminum tubing.

Step 2: Clean/smooth the ends of the F-14109A-R Fuse Side-Valve Fuel Line. Remove any debris from inside the fuel line with compressed air.

Step 3: Inspect the fuel line for debris and acceptable flaring. Refer to Section 5.14.

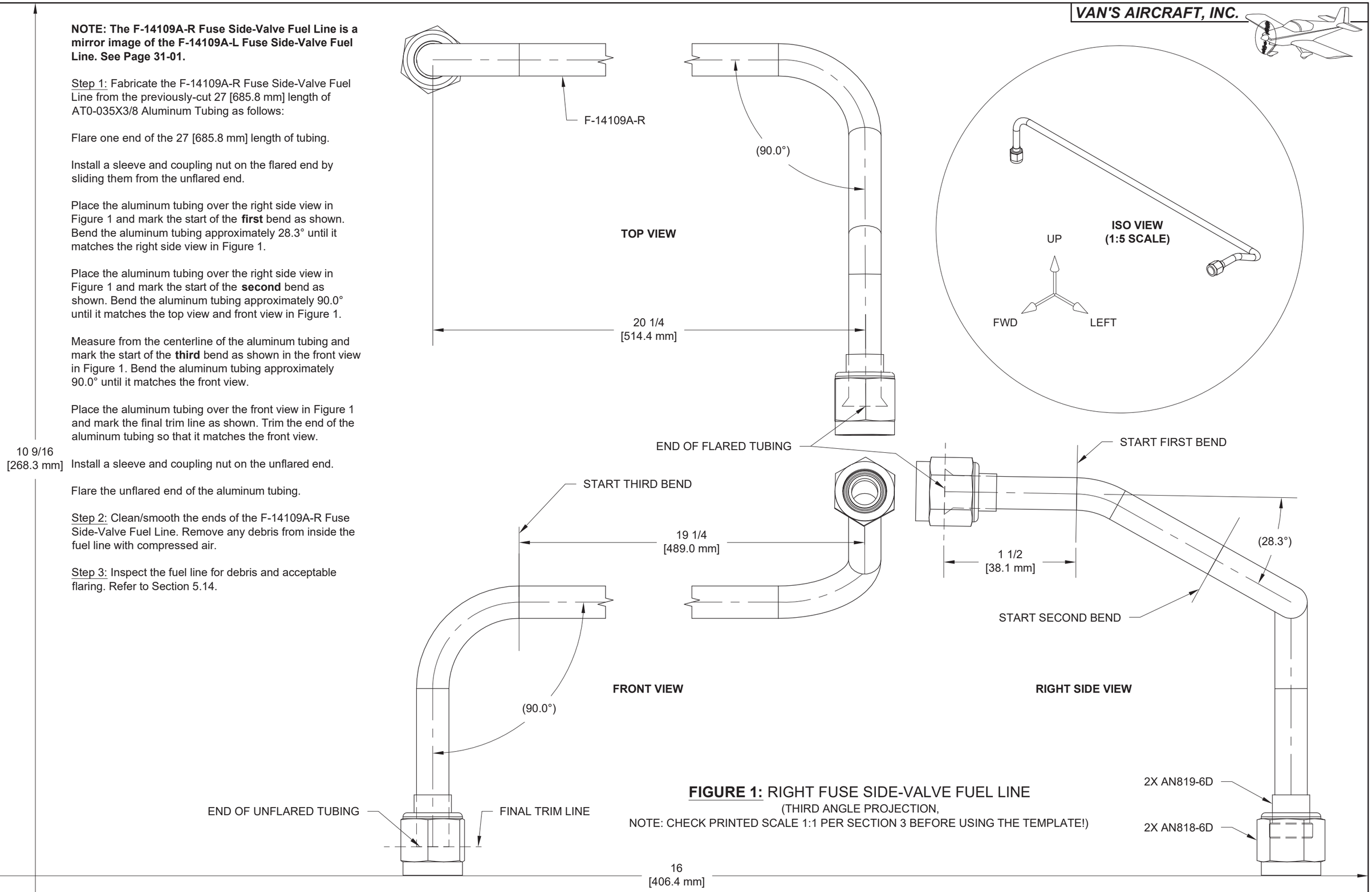

FIGURE 1: RIGHT FUSE SIDE-VALVE FUEL LINE
(THIRD ANGLE PROJECTION,
NOTE: CHECK PRINTED SCALE 1:1 PER SECTION 3 BEFORE USING THE TEMPLATE!)

NOTE: DO NOT use any type of sealing compound on the fuel line fittings: clean metal contact surfaces are required.

NOTE: When properly bent, the flared tubing ends will rest against the flared fittings. DO NOT use the coupling nuts to forcibly take up any gap.

NOTE: Refer to Figure 1 for the following steps:

Step 1: Insert the inboard end of the F-14109A-L & -R Fuse Side-Valve Fuel Lines through the openings in the F-01451-L & -R Tunnel Sides.

Step 2: Snap the fuel lines into the lower slots in the F-01498A Fuel Line Brackets.

Step 3: Start to thread the coupling nuts of the fuel lines onto both the FUEL-FS20X2-T Fuel Selector Valve elbow fittings and the AN833-6D elbows.

Step 4: Tighten the coupling nuts on each end of the fuel lines with a short 11/16 wrench or a crow's foot.

Step 5: Fully tighten the AN924-6D nuts on the outboard elbow fittings.

Step 6: Install the F-01498B Fuel Line Brackets as shown.

Step 7: Ensure that the fuel lines do not contact the openings in the F-01451-L & -R Tunnel Sides. Use a piece of safety wire as a feeler gauge around the circumference of the fuel lines. Adjust the bends by hand if/as required to ensure adequate clearance.

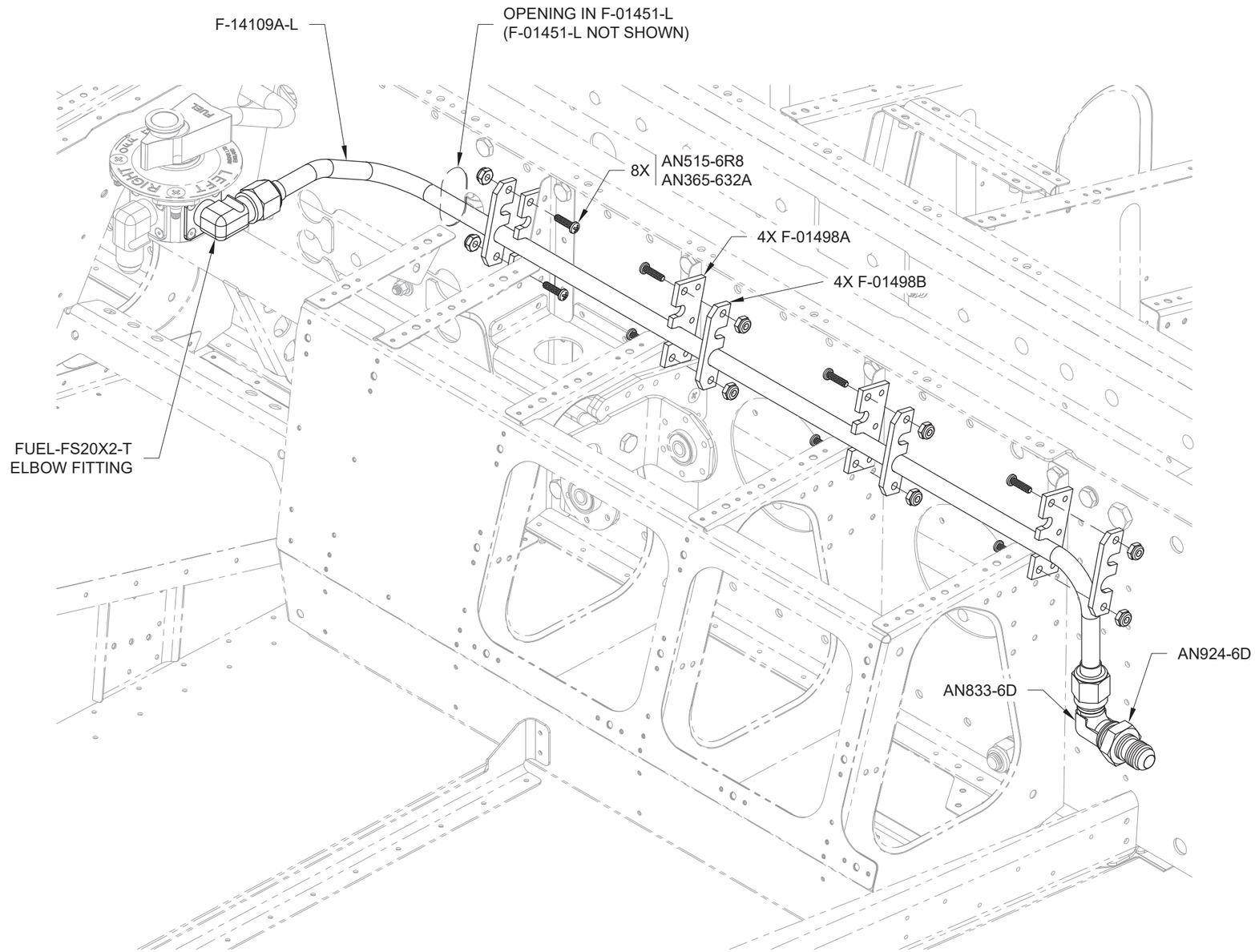

FIGURE 1: INSTALL FUSE SIDE-VALVE FUEL LINES
(LEFT SIDE SHOWN)

Step 1: Straighten approximately 7 [177.8 mm] of AT0-035X3/8 Aluminum Tubing.

Step 2: Cut a 6 [152.4 mm] length from the straightened tubing.

Step 3: Fabricate the F-14109B Valve-Filter Fuel Line as follows:

Flare one end of the 6 [152.4 mm] length of tubing.

Install a sleeve on the flared end by sliding it from the unflared end.

Place the aluminum tubing over Figure 1 and mark the start of the bend as shown. Bend the aluminum tubing approximately 76.0° until it matches Figure 1.

Place the aluminum tubing over Figure 1 and mark the final trim line as shown. Trim the end of the aluminum tubing so that it matches Figure 1.

Install one sleeve and two coupling nuts on the unflared end as shown.

Flare the unflared end of the aluminum tubing.

Step 4: Clean/smooth the ends of the F-14109B Valve-Filter Fuel Line. Remove any debris from inside the fuel line with compressed air.

Step 5: Inspect the fuel line for debris and acceptable flaring. Refer to Section 5.14.

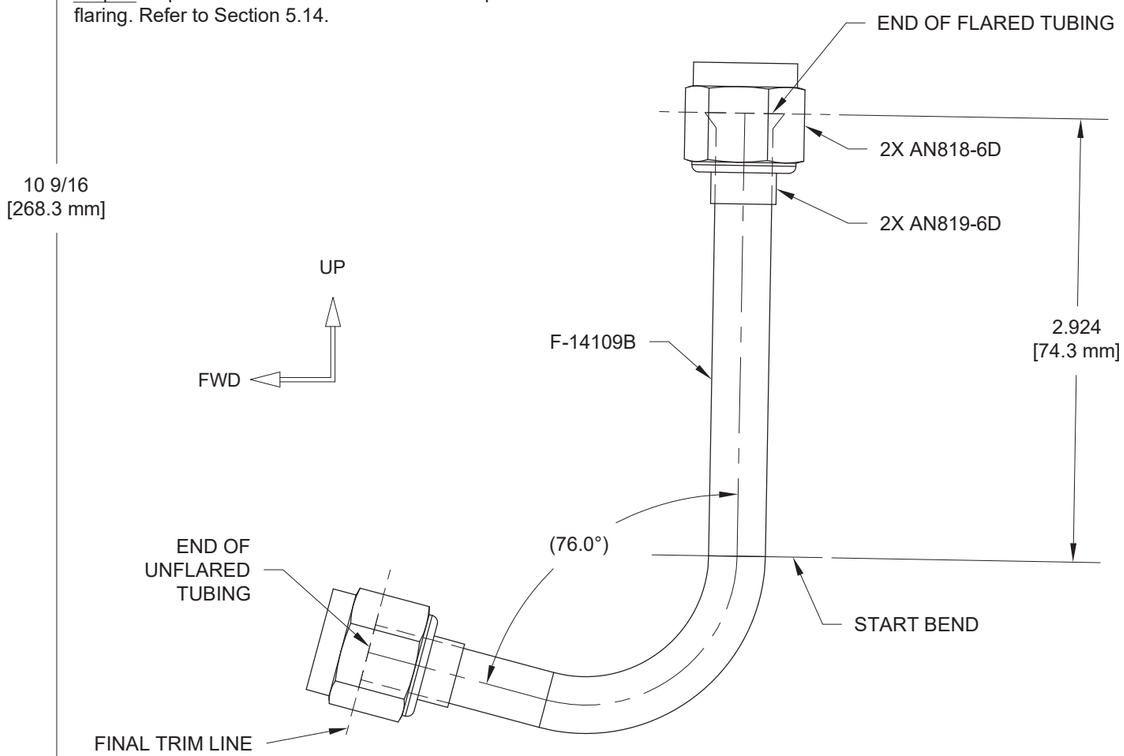

FIGURE 1: VALVE-FILTER FUEL LINE

NOTE: CHECK PRINTED SCALE 1:1 PER SECTION 3 BEFORE USING THE TEMPLATE!

Step 6: Install the F-14109B Valve-Filter Fuel Line between the FUEL-FS20X2-T Fuel Selector Valve and FUEL-FX375-MK Fuel Filter as shown in Figure 2.

Step 7: Tighten the coupling nuts on each end of the F-14109B Valve-Filter Fuel Line with a short 11/16 wrench or a crow's foot.

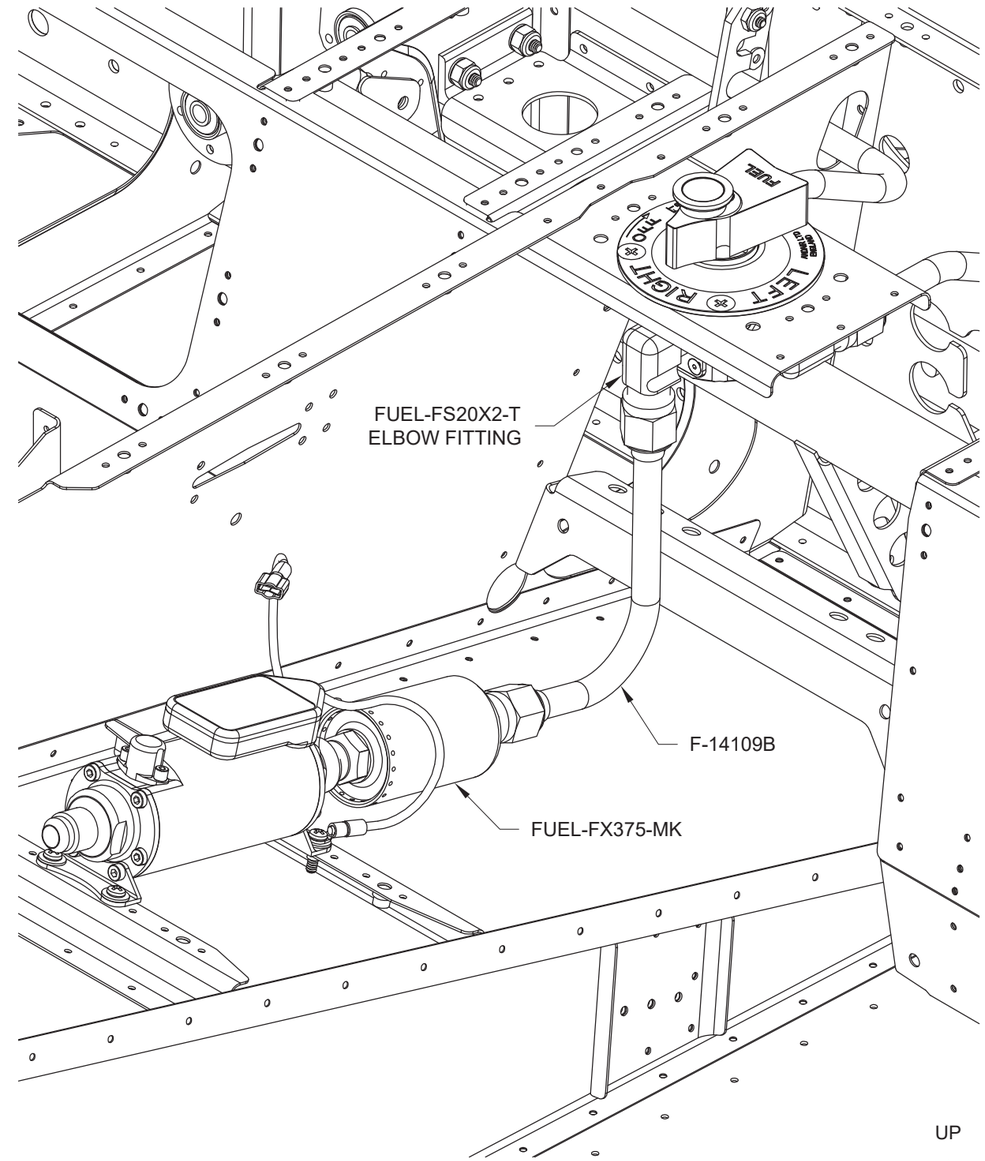

FIGURE 2: INSTALL VALVE-FILTER FUEL LINE

16
[406.4 mm]

Step 1: Straighten approximately 12 [304.8 mm] of AT0-035X3/8 Aluminum Tubing.

Step 2: Cut a 11 1/4 [282.6 mm] length from the straightened tubing.

Step 3: Fabricate the F-14109C Pump-Firewall Fuel Line as follows:

Flare one end of the 11 1/8 [282.6 mm] length of tubing.

Install a sleeve on the flared end by sliding it from the unflared end.

Place the aluminum tubing over Figure 1 and mark the start of the **first** bend as shown. Bend the aluminum tubing approximately 23.2° down until it matches the right view in Figure 1.

Step 4: Continue fabricating the F-14109C Pump-Firewall Fuel Line as follows:

Place the aluminum tubing over Figure 1, insert a 3/8 [9.5 mm] thick spacer under the tubing as shown, and mark the start of the **second** bend.

Rotate the tube bender about the axis of the aluminum tubing so that the tubing will be bent approximately 8.2° up (see right view) and 4.0° to the right (see top view) in a single bend. Bend the tubing so that it matches Figure 1.

If required, place the aluminum tubing over Figure 1 and mark the final trim line as shown. Trim the end of the aluminum tubing so that it matches Figure 1.

Install a coupling nut on the flared end.

Install a sleeve and coupling nut on the unflared end.

Flare the unflared end of the aluminum tubing.

Step 5: Clean/smooth the ends of the F-14109C Pump-Firewall Fuel Line. Remove any debris from inside the fuel line with compressed air.

Step 6: Inspect the fuel line for debris and acceptable flaring. Refer to Section 5.14.

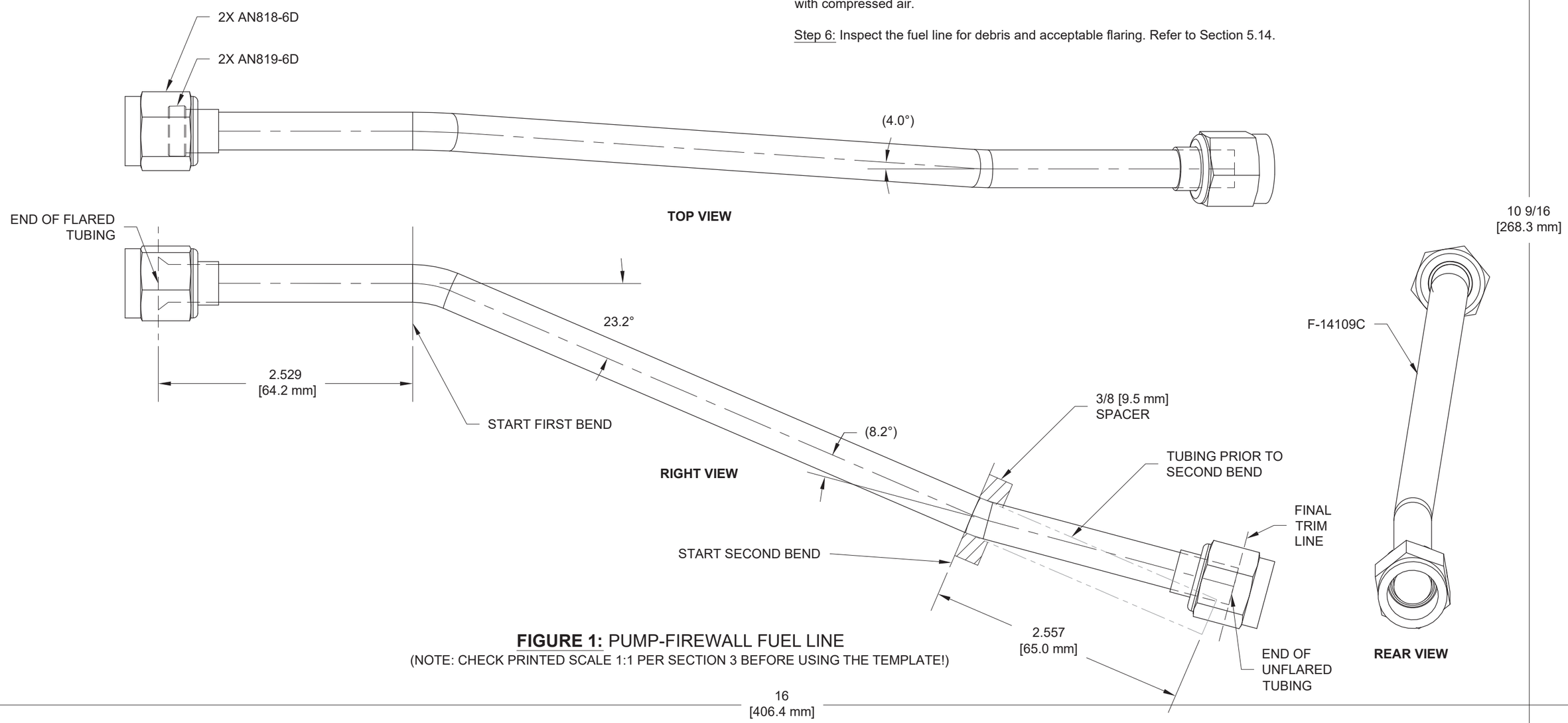

FIGURE 1: PUMP-FIREWALL FUEL LINE
(NOTE: CHECK PRINTED SCALE 1:1 PER SECTION 3 BEFORE USING THE TEMPLATE!)

Step 1: Install the F-14109C Pump-Firewall Fuel Line between the ES-PX375-TC Fuel Pump and the AN833-6D elbow fitting on the firewall as shown in Figure 1.

Step 2: Tighten the coupling nuts on each end of the F-14109C Pump-Firewall Fuel Line with a short 11/16 wrench or a crow's foot.

Step 3: Block all inlets and outlets to the fuel system using plastic caps and plugs (or equivalent). **DO NOT** allow contaminants to enter any part of the fuel system.

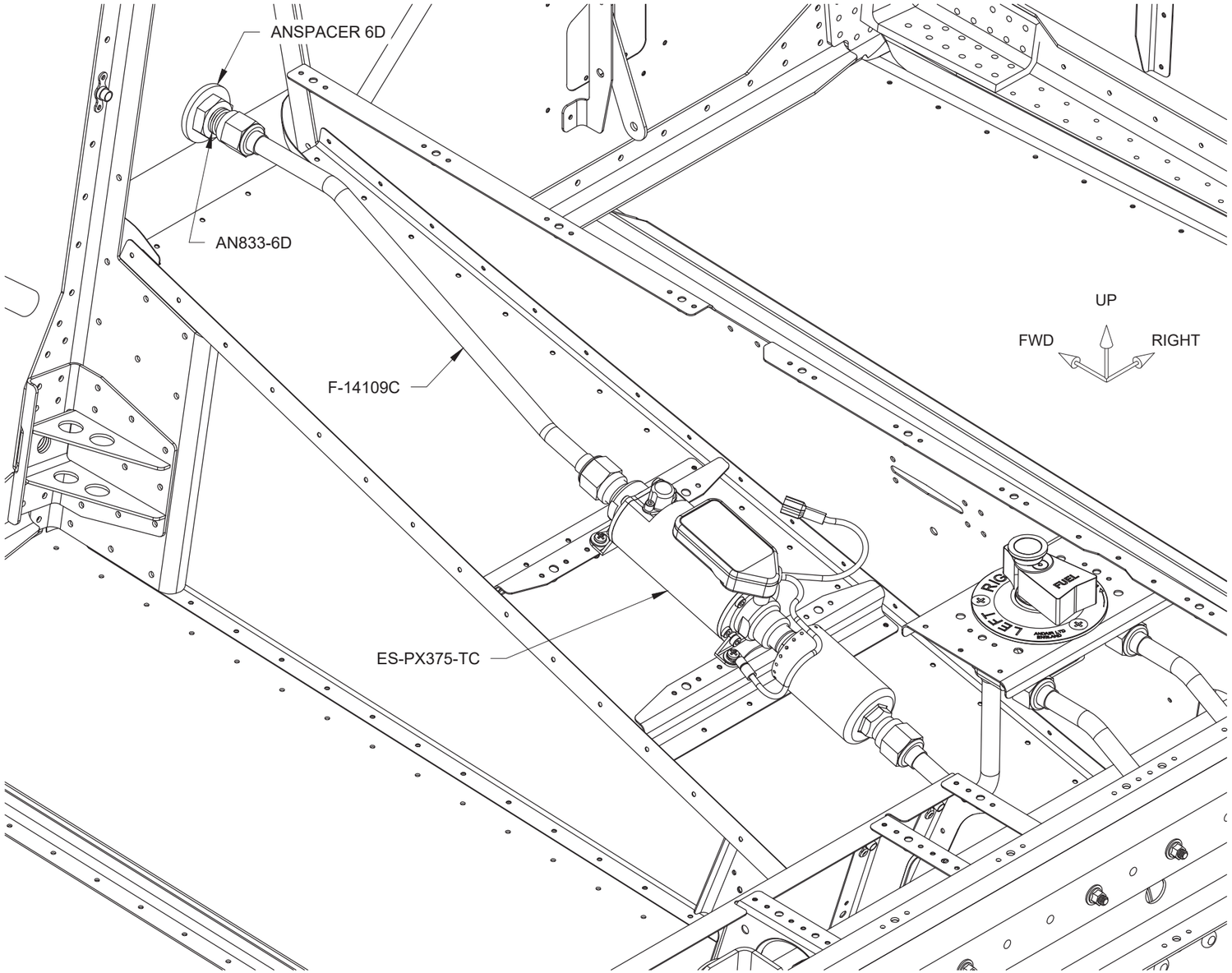

FIGURE 1: INSTALL PUMP-FIREWALL FUEL LINE

THIS PAGE INTENTIONALLY LEFT BLANK