VAN'S AIRCRAFT, INC.

SECTION 26iS/U: FUEL TANK

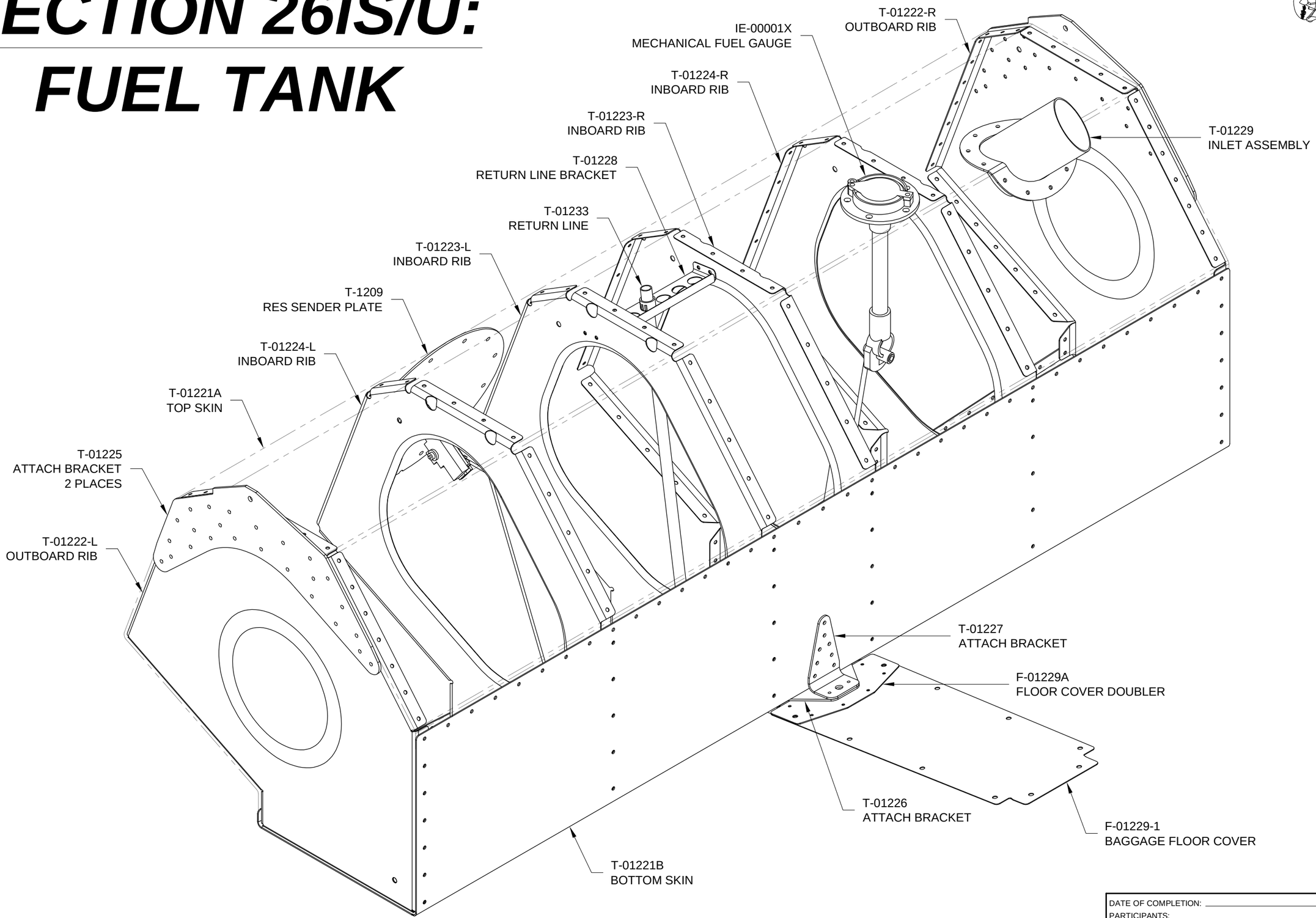

DATE OF COMPLETION: _____

PARTICIPANTS: _____

DATE: 9/18/17	REVISION: 0	RV-12iS	PAGE: 26iS/U-01

VAN'S AIRCRAFT, INC.

Step 1: Dimple the remaining, undimpled holes in the T-01221A and T-01221B that are called out in Figures 1 and 3 respectively.

Step 2: Machine countersink the nutplate attach rivet holes in the T-01221A for the nutplates called out in Figure 1 and Figure 2.

Step 3: Rivet the nutplates to the T-01221A as shown in Figure 1 and Figure 2.

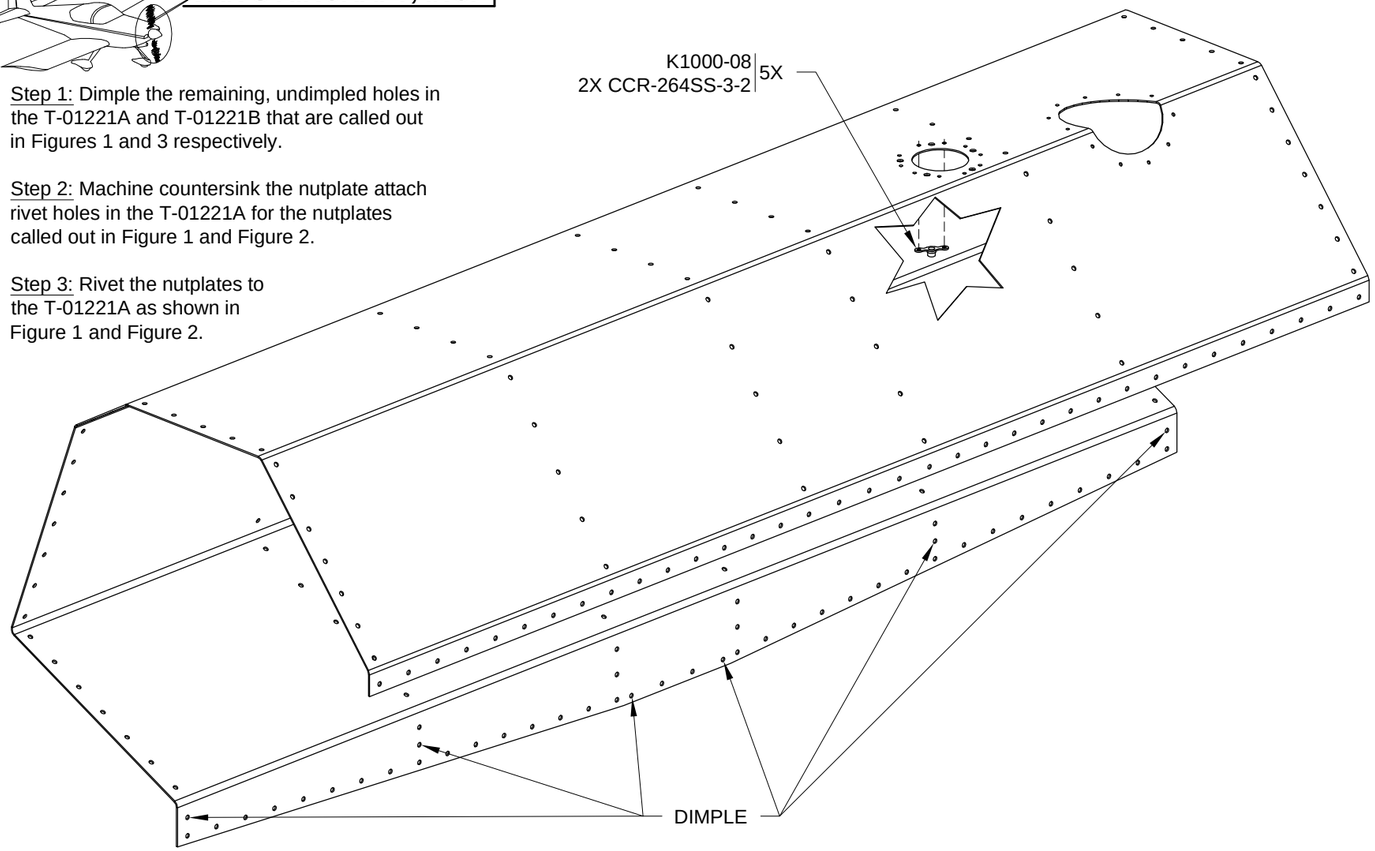

FIGURE 1: T-01221A TOP SKIN

Step 4: Dimple the T-01222-L & -R, T-01224-L & -R, and T-01223-L & -R to accommodate the dimples in the T-01221A and T-01221B as called out in Figure 4. Only the ribs on the left side of the fuel tank are shown in the figure, mirror the dimpling operations for the right side.

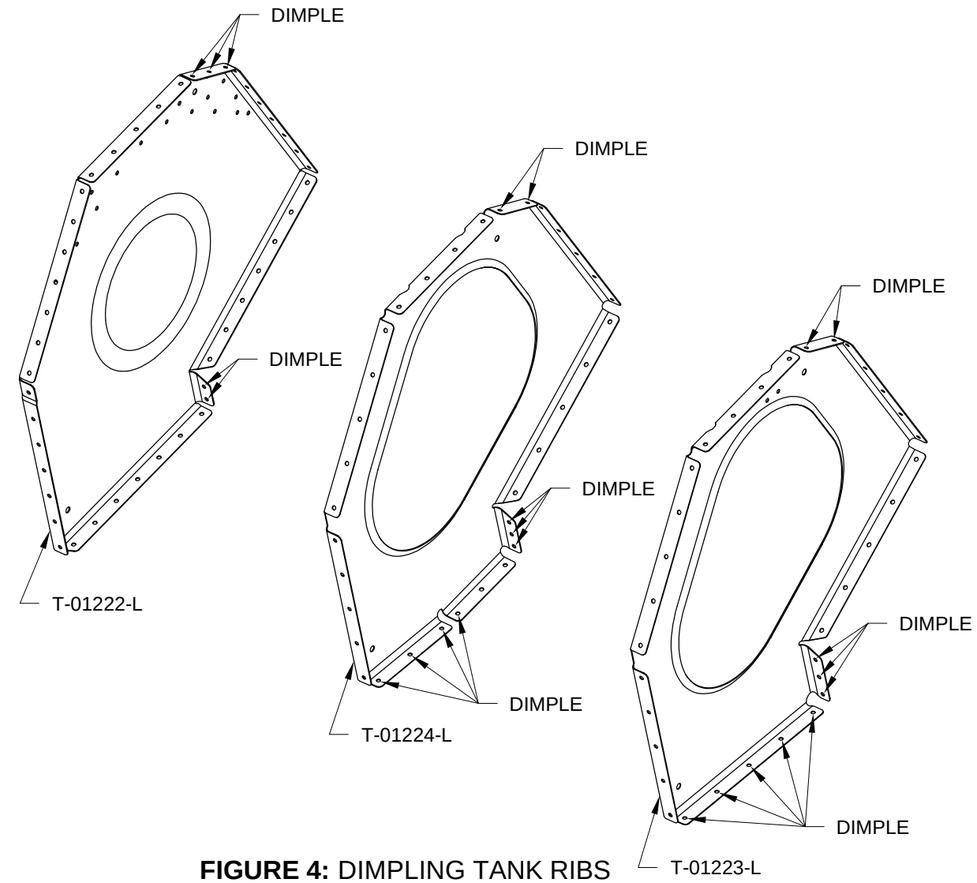

FIGURE 4: DIMPLING TANK RIBS

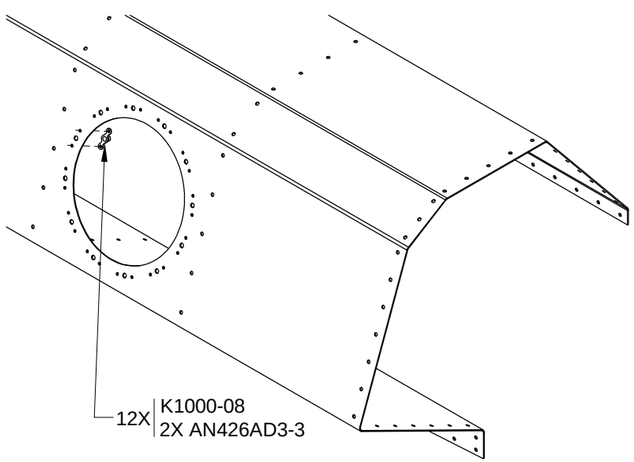

FIGURE 2: ATTACHING NUTPLATES TO THE T-01221A TOP SKIN

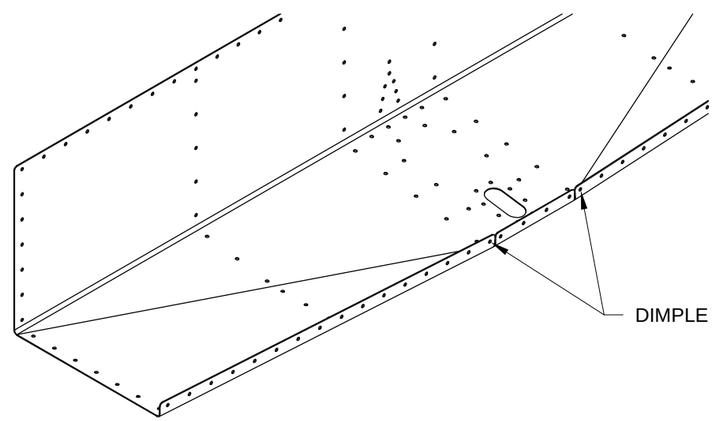

FIGURE 3: DIMPLING THE T-01221B BOTTOM SKIN

Step 5: Machine countersink the #30 holes in the two T-01225's. As indicated in Figure 5, the side in which the holes are machine countersunk determines left or right orientation of the part.

Step 6: Machine countersink the T-01226 for the rivets shown in Figure 6, then rivet the T-01226 to the T-01227.

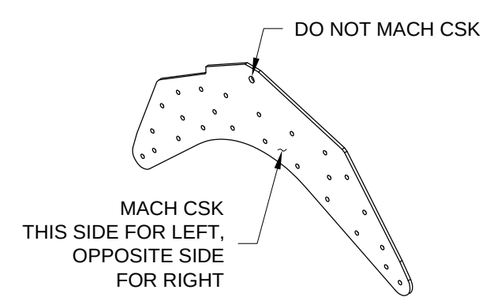

FIGURE 5: MACHINE COUNTERSINKING THE T-01225 ATTACH BRACKET

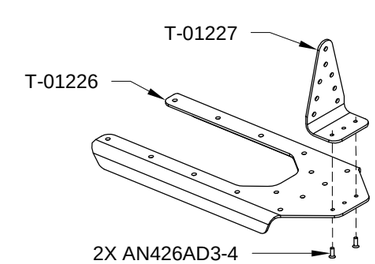

FIGURE 6: T-01227 AND T-01226 ATTACH BRACKETS

Step 1: Cleco the ribs to the tank skins as shown in Figure 1. The front and the back of the T-01221B overlap the T-01221A.

Step 2: Using a sharp drill bit and light force, match-drill #30 the indicated hole in both ends of the T-01221A & B into the T-01222-L & -R as called out in Figure 1.

Step 3: Remove the T-01221B and the T-01222-L & -R, then deburr the match-drilled holes.

Cleco the T-01222-L & -R back in place on the T-01221A, but leave the T-01221B off.

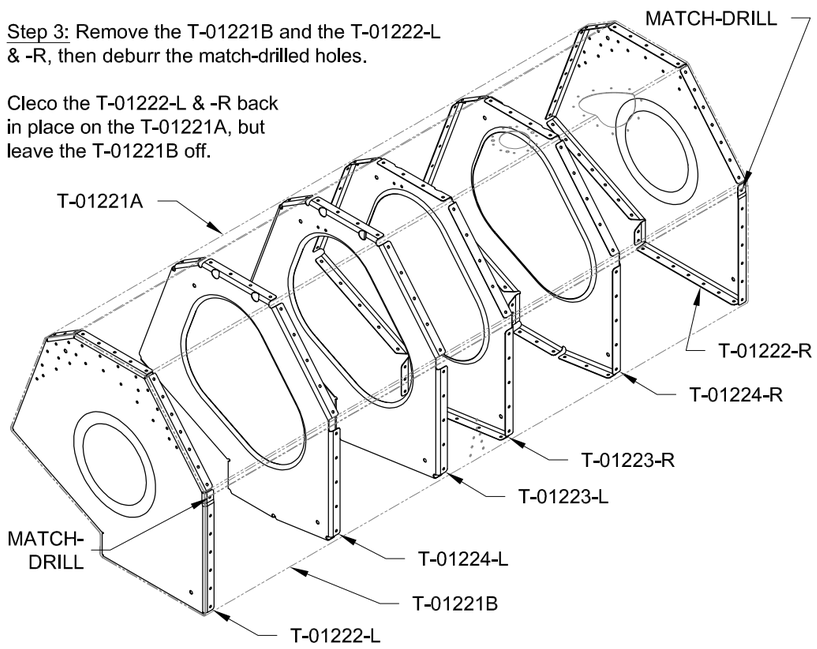

FIGURE 1: TANK SKINS AND RIBS

Step 4: Cleco the T-01229 to the T-01221A, then final-drill #30 the holes common to the two parts. See Figure 2.

Step 5: Insert the IE-00001X (see Page 26iS/U-01) into the hole indicated in Figure 2 and ensure that the flange on the IE-00001X lies flush against the T-01221A. Enlarge the hole slightly with a deburring tool if necessary.

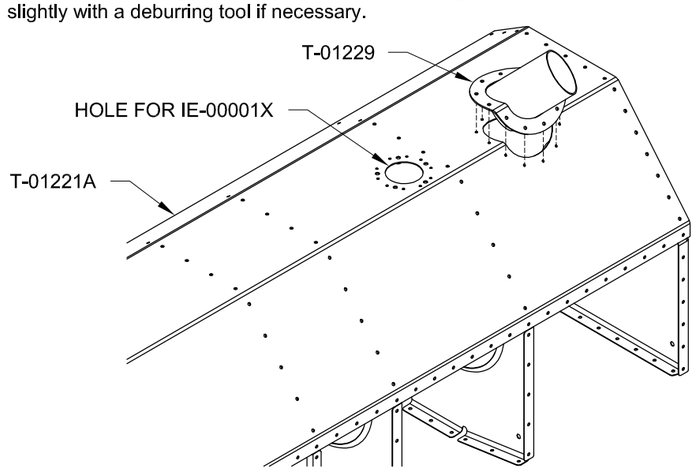

FIGURE 2: FINAL-DRILLING THE FUEL TANK INLET ASSEMBLY

Step 6: Use a vise to bend the IE F-385B Float Arm per the dimensions given in Figure 3 and the full scale template in Figure 4 (Check printed scale 1:1 per Section 3 before using the template). Trim off the extra length, then insert the float arm into the IE F-385B Fuel Sending Unit. See Figure 3. Snap the float arm into the clips on the fuel sending unit.

Step 7: Machine countersink the nutplate attach rivet holes in the T-1209 for the nutplates called out in Figure 5, then rivet on the nutplates.

Step 8: To make future removal easier, file a bevel into the aft edge of the T-01209 so that a putty knife or similar tool can be used to pry the part off of the T-01221A.

NOTE: The IE F-385 Gasket in the following step is used only as a spacer to represent the thickness of the fuel tank sealant that will be used for the final assembly. THE GASKET WILL NOT BE USED IN THE FINAL ASSEMBLY.

Step 9: Temporarily attach the IE F-385B Fuel Sending Unit, the IE F-385 Gasket, and T-1209 to the T-01221A with a few screws just to hold the assembly in place. The large notch in the edge of the T-01209 is oriented directly downward with the small notch inboard. See Figure 5 and Page 26iS/U-04, Figure 1.

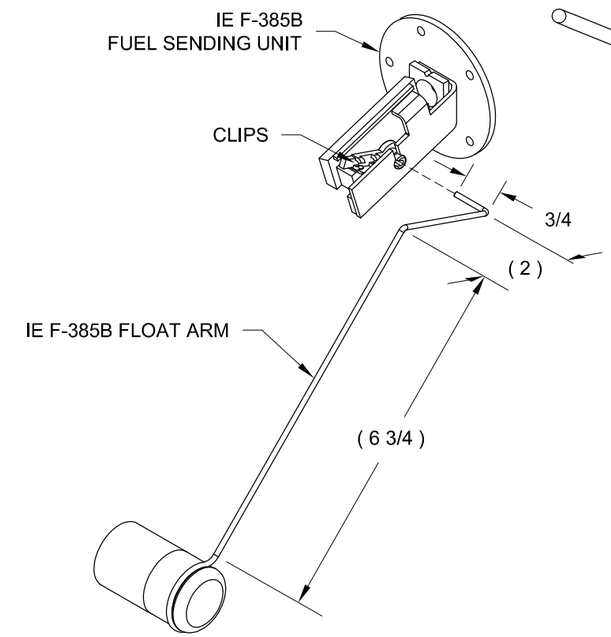

FIGURE 3: BENDING THE FLOAT ARM

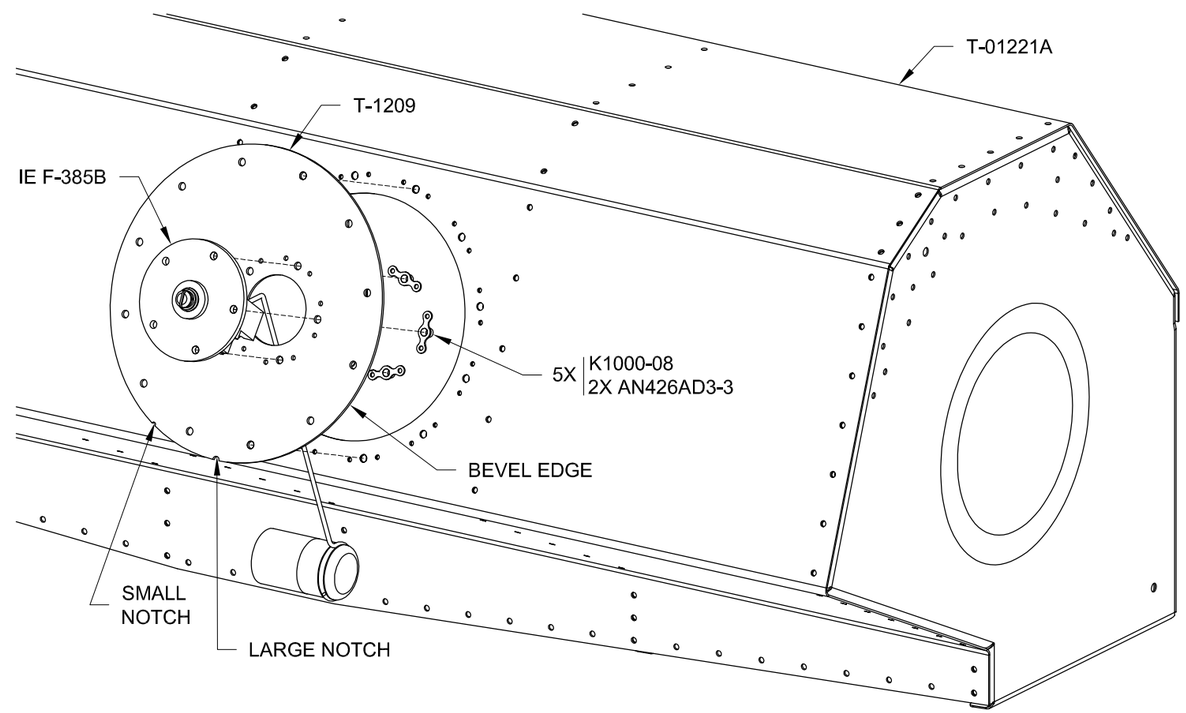

FIGURE 5: ATTACHING THE FUEL SENDER

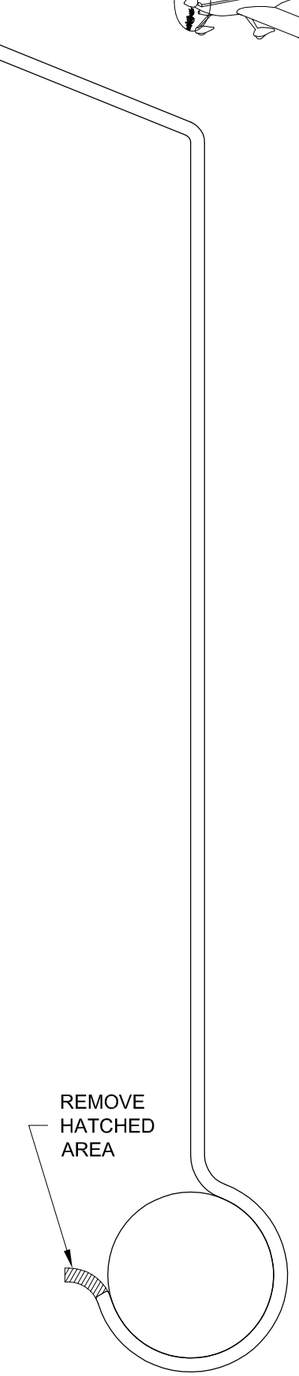

FIGURE 4: FLOAT ARM TEMPLATE

NOTE: Careful set-up of the fuel sending unit float arm is CRITICAL for the accurate measurement of minimum fuel.

NOTE: Place a straight edge across the bottom of the T-01224-L and T-01223-L Ribs in order to accurately represent the position of the bottom skin for Step 1.

Step 1: Fine-tune the bends in the IE F-385B float arm to achieve proper travel of the float as shown in Figure 1.

At the "Empty" stop of the sending unit, the float must contact the bottom skin (or straight edge) with up to a 1/16 in. [1.6mm] gap. Be sure the float arm clears the inside corner of the T-01221A.

At the "Full" stop of the sending unit, the float should clear the T-01221A.

Step 2: Once satisfied with the travel of the float arm, completely disassemble the fuel tank.

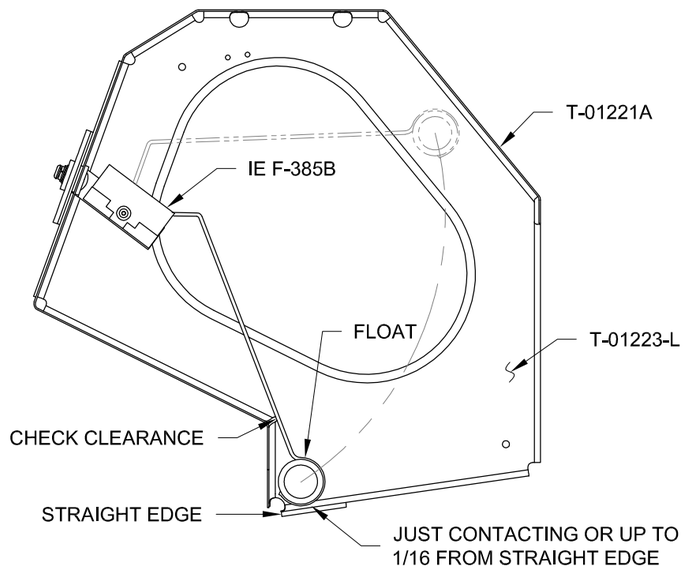

FIGURE 1: FLOAT TRAVEL

Step 3: Scuff ALL aluminum mating surfaces; every place that a part contacts another part inside and outside of the fuel tank as shown in Figure 2. There are only two exceptions. The first exception is the mating surfaces of the T-01228 (see Page 26iS/U-01). The second exception is the mating surface of the T-1209 with the T-01221A (see Figure 4); future removal of the T-1209 is made easier if it is not aggressively bonded to the T-01221A.

Do not forget to scuff the mating surfaces of the aluminum parts that get attached to the tank: the T-01225, T-01226, T-01227, T-01229, and T-01232.

Scuff the inside corners of the T-01222-L & -R as indicated in Figure 3.

Scuff the surface of the T-1209 that mates with the IE F-385B as shown in Figure 4.

NOTE: The plug rivets in the following step can be sealed after their installation as long as the inside surface around the holes are scuffed.

Step 4: Scuff around, then install a plug rivet into the #12 tooling hole in the T-01222-L & -R end ribs as called out in Figure 3.

Step 5: Wipe all scuffed surfaces free of debris, and inspect all dimpled holes to make sure there are no pieces of protective vinyl stuck in them.

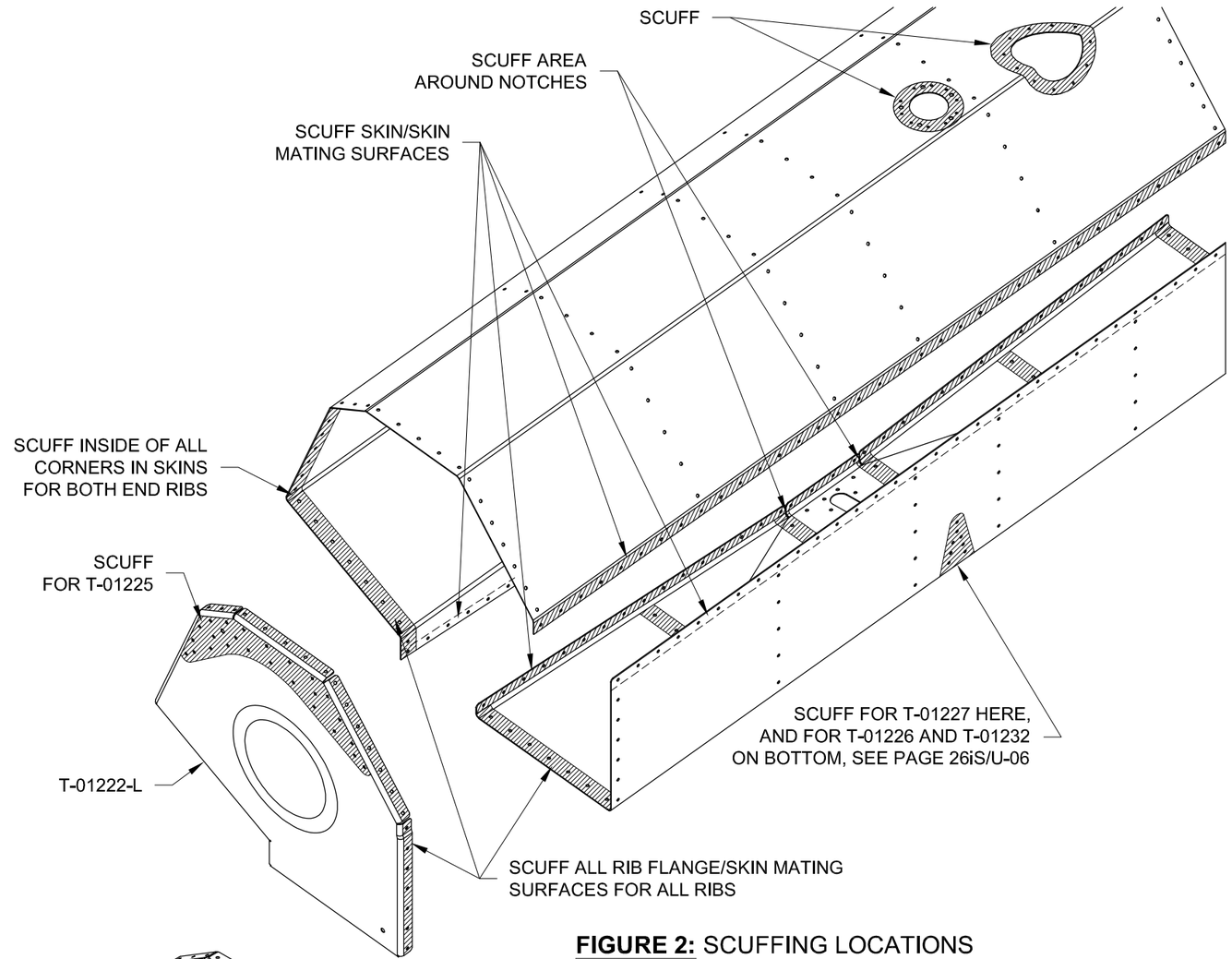

FIGURE 2: SCUFFING LOCATIONS

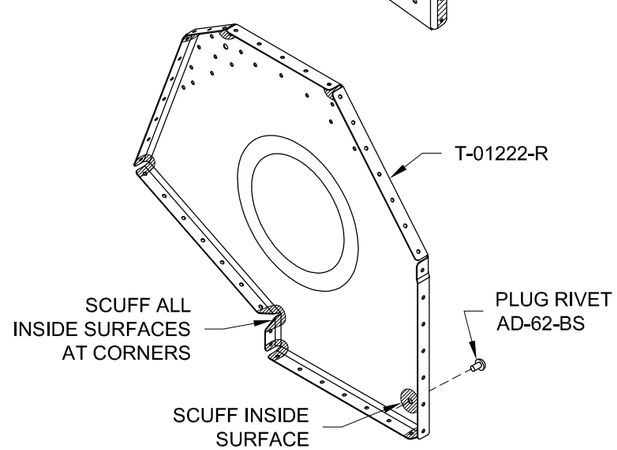

FIGURE 3: ADDITIONAL SCUFFING FOR T-01222-L & -R

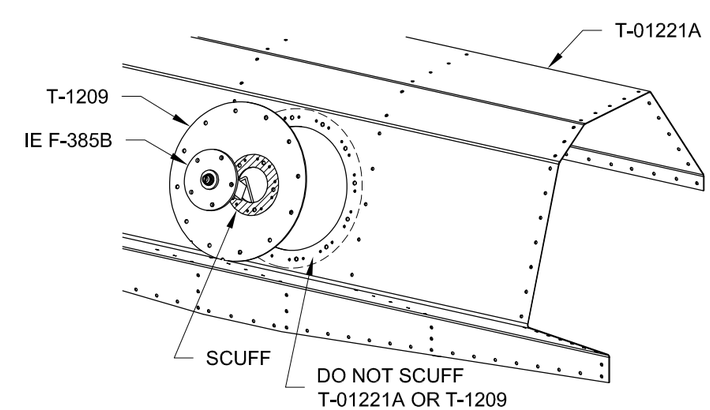

FIGURE 4: SCUFFING FOR T-1209

NOTE: See section 5.17 for information regarding safe usage and application of fuel tank sealant.

When fastening parts, dip and spin all fastener shanks in tank sealant to apply a thin and even coating before they are inserted. This includes rivets and screws. Set rivets slowly using a hand blind rivet puller, allowing the sealant to displace before the rivet is completely set.

Prior to beginning the sealing process, walk through and become familiar with all of the steps involved. Make sure that every interior surface that gets sealant is scuffed and cleaned, and that all edges/holes are deburred.

NOTE: Prepare to work uninterrupted for at least three hours while riveting and sealing the fuel tank.

Step 1: Apply a strip of "reminder" tape to the flanges of the T-01222-L & -R, T-01223-L & -R, and T-01224-L & -R that mate to the bottom skin. This will prevent the flanges from being contaminated with sealant while working with the top skin. See Figure 1.

Step 2: To hold the T-01221A Top Skin open while inserting the ribs, wedge a 10 1/2 in. [26.7cm] long piece of wood in the middle of the top skin between the fwd and aft sides.

NOTE: Due to working time of the sealant, the sealing can be accomplished in three smaller operations as listed below.

First Operation: Top Skin and Rib Flanges

Step 3: Mix up a batch of sealant about the size of a golf ball.

Step 4: Apply a bead of sealant to the flanges of the T-01223-L & -R that mate with the top skin, use a craft stick to smear the sealant uniformly (approximately 1/32 thick) over the flanges, then cleco the ribs to the top skin using only the two flanges indicated in Figure 1.

Step 5: Rivet the T-01228 to the T-01223-L & -R as shown in Figure 1. Install the snap bushing into the center hole.

Step 6: Apply a bead of fuel tank sealant to the T-01224-L & -R flanges, then cleco them in place like the T-01223-L & -R.

Step 7: Repeat the previous step for the T-01222-L & -R.

Step 8: Remove the wooden wedge, then securely cleco all of the mating flanges of the ribs to the top skin.

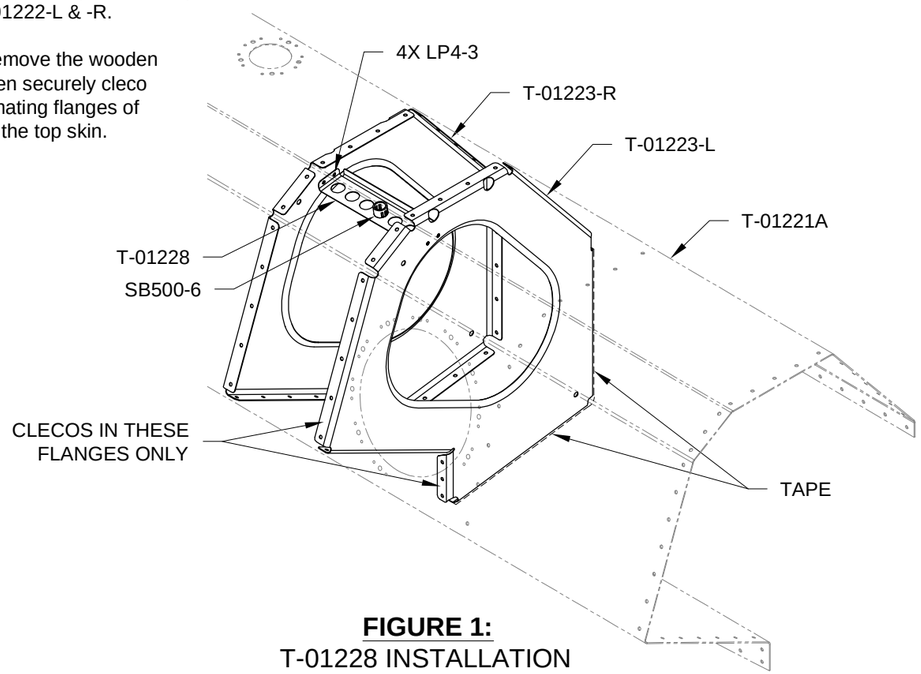

FIGURE 1:
T-01228 INSTALLATION

Step 9: Except for the locations indicated in Figure 2, rivet the ribs to the T-01221A using the rivets called out.

Step 10: Apply a glob of sealant to the inside of the plug rivets on the T-01222-L & -R.

Second Operation: Corners, T-01225, and T-01229

Step 11: Mix up another batch of sealant the size of the first batch.

Step 12: Apply a glob of sealant to plug every open corner in the T-01222-L & -R Outboard Ribs that is common to the top skin. See Figure 2.

Step 13: Seal the portion of the seam between the T-01222-L & -R and top skin that lies under the T-01225. Smooth out the sealant so that the T-01225 will lay flush against the ribs and edge of the top skin. See View A-A.

Step 14: Apply a thin smear of sealant to the mating surfaces of the two T-01225s, then rivet them in place as shown in Figure 2.

Step 15: Apply sealant to the flange of the T-01229, then rivet to the top skin as shown in Figure 2. The rivets in the locations where the rivet puller interferes with the T-01229 can be installed from the inside of the tank.

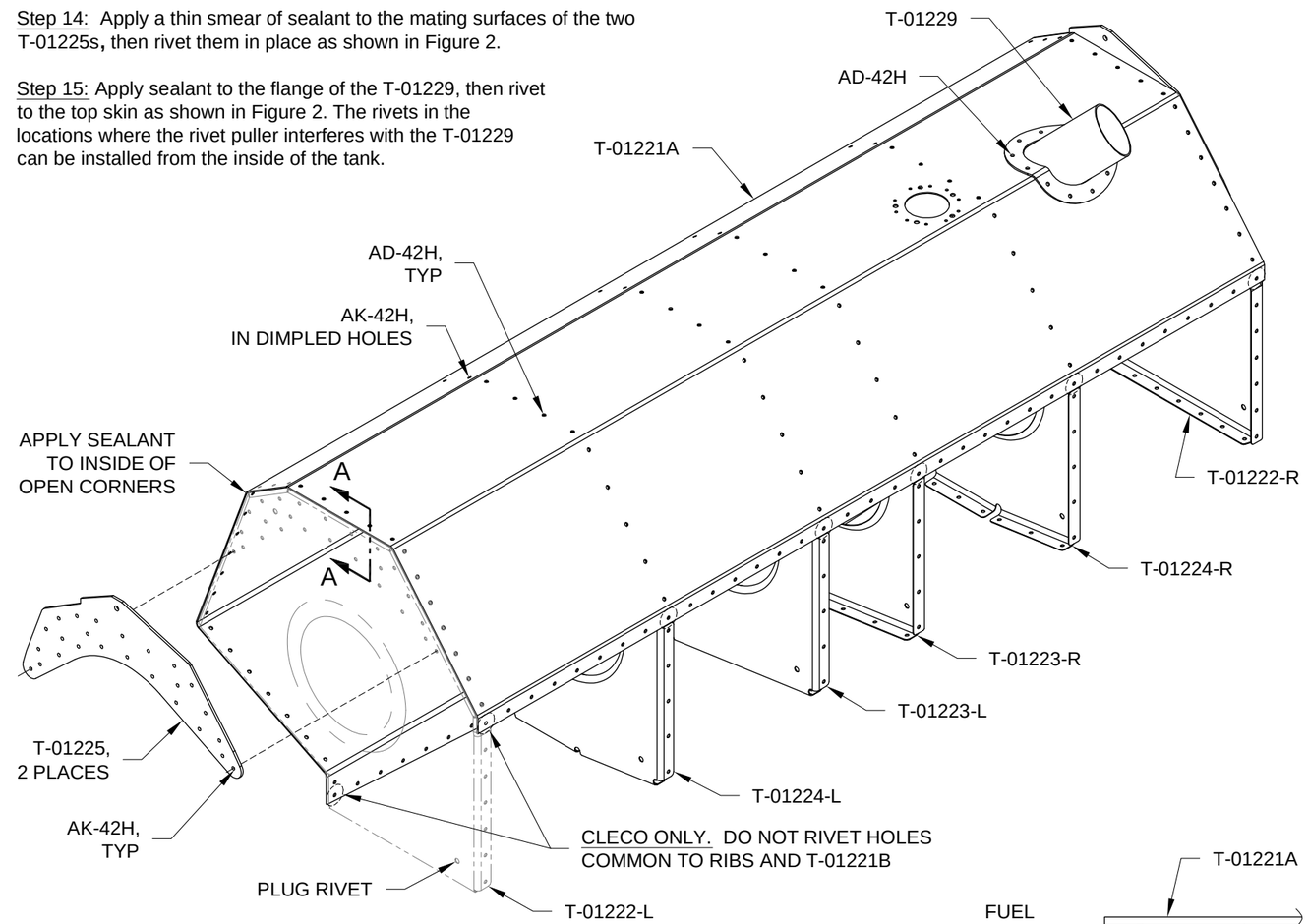

FIGURE 2: SEALING THE TOP SKIN

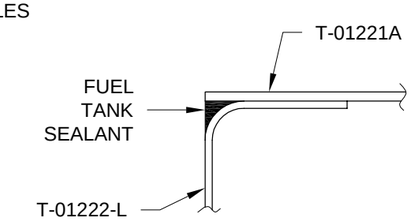

VIEW A-A

Third Operation: Bottom Skin, Attach Brackets, and Pickup/Return Fitting

Step 1: Remove the "reminder" tape from rib flanges and mix up a batch of fuel tank sealant as before.

Step 2: Apply sealant to the flange of the T-01232, then rivet it to the bottom of the T-01221B as shown in Figure 1.

Step 3: Apply sealant to the mating surfaces of the T-01226 and T-01227, then rivet the parts to the T-01221B as shown in Figure 1.

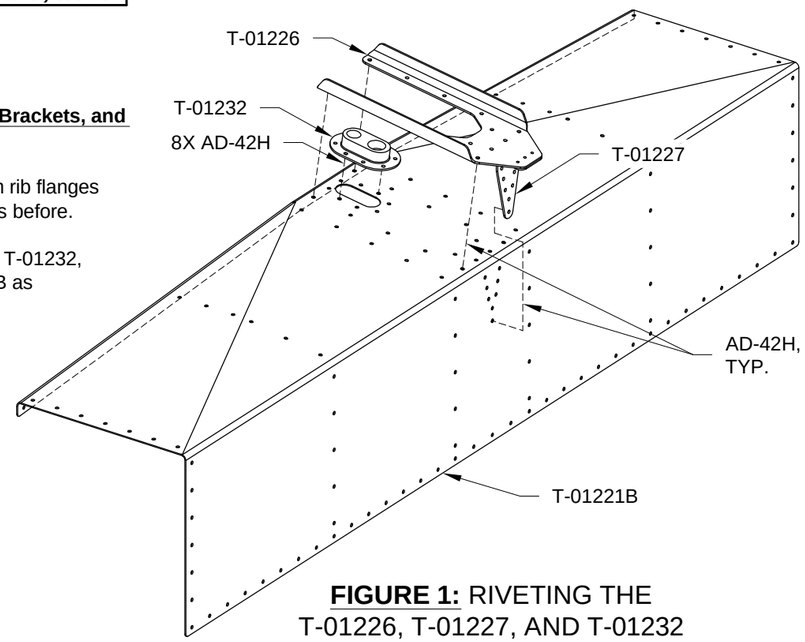

FIGURE 1: RIVETING THE T-01226, T-01227, AND T-01232

Step 4: Apply sealant to the bottom skin in the areas that mate with the top skin. See Figure 2.

Apply sealant to the bottom skin in the areas that mate with the ribs.

Smear sealant into the corners at both ends of the bottom skin, then fill the corners with enough sealant to plug the open corners in the end ribs once the bottom skin is riveted in place.

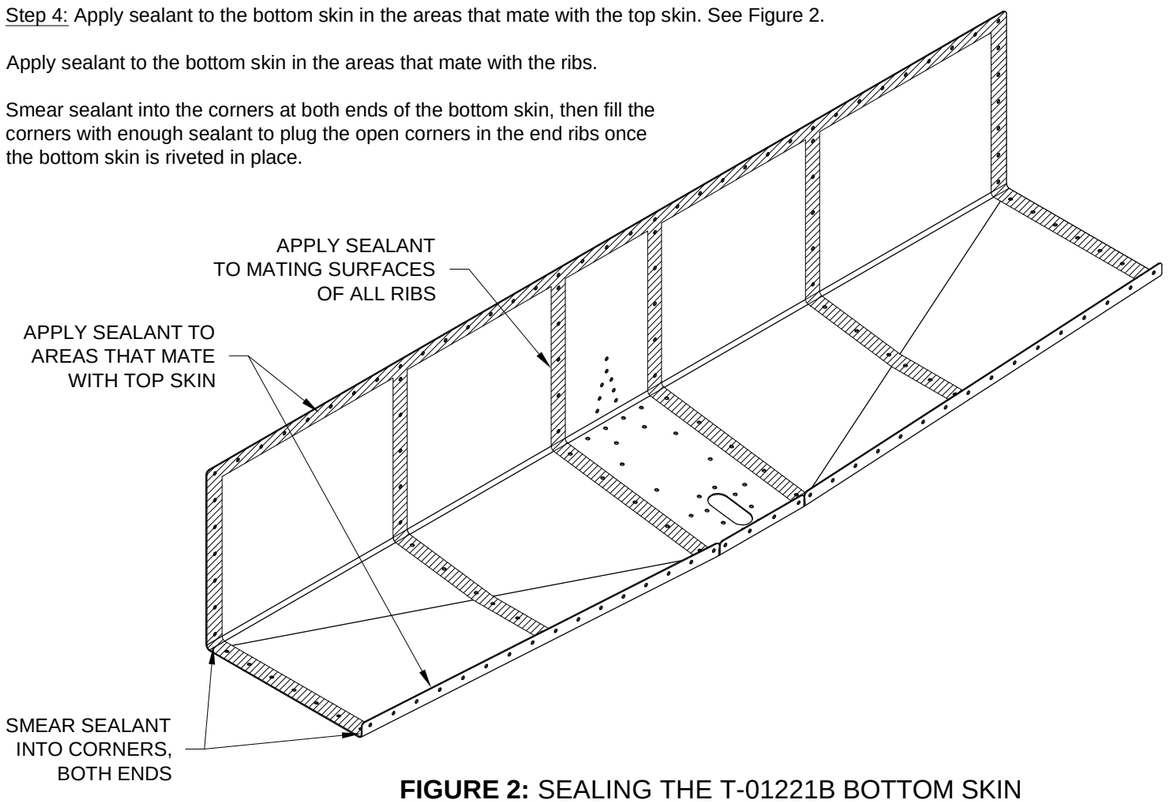

FIGURE 2: SEALING THE T-01221B BOTTOM SKIN

NOTE: Place two short 4x4"s on the work bench to hold the inverted tank off of the T-01229.

Step 5: With the tank upside down, apply sealant to all rib flanges and to the areas of the top skin that mate with the bottom skin.

Step 6: With a helper, carefully place the bottom skin onto the inverted fuel tank while slightly prying the bottom skin open for clearance. As indicated in Figure 3, place and cleco the small flanges into place first, than wrap the skin around the tank.

Step 7: Cleco the rest of the bottom skin in place, then rivet using per the call-outs in Figure 3.

Step 8: Examine the tank carefully and ensure that there is adequate sealant on all corners. A bright light shining inside the tank in a dimly lit room can be helpful in finding areas of inadequate sealant. Using a flashlight and mirror through the access hole can also help.

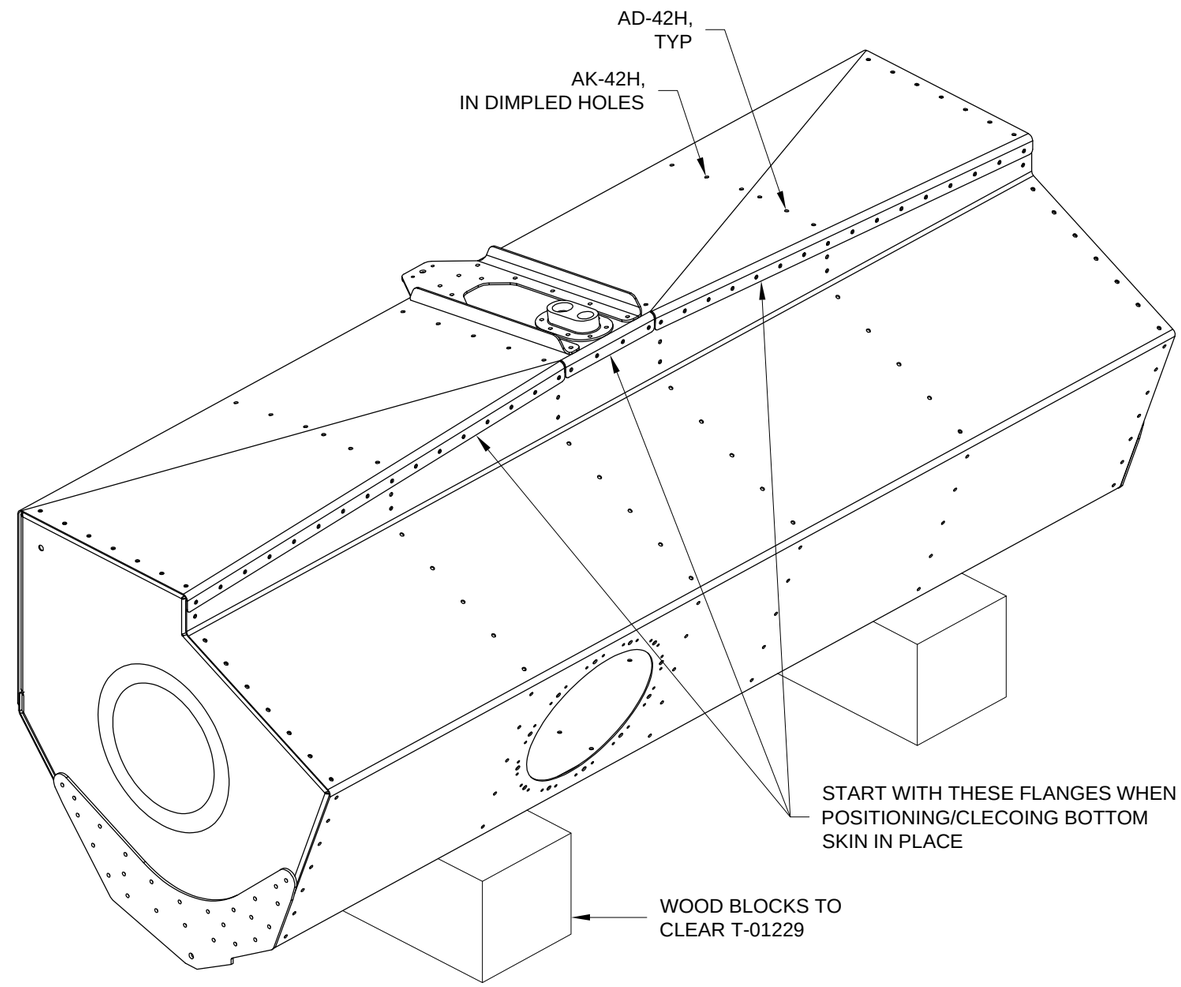

FIGURE 3: INSTALLING T-01221B BOTTOM SKIN

Step 1: Lightly sand around the T-01233 until it can slide 1/2 in. [12.7mm] into the NPT end of the FLF-00017 with a slight press fit.

Step 2: Apply sealant around the outside of the T-01233 and insert it into the FLF-00017 as shown in Figure 1. (DO NOT apply the sealant to the inside of the FLF-00017. Doing so could push excess sealant into the FLF-00017 and plug the opening.)

NOTE: See Section 5.27 for detailed fluid fitting assembly instructions.

Step 3: Thread either the VA-261 (RV-12ULS) or VA-265 (RV-12iS) into the T-01232 as shown in Figure 1. If installing the VA-265, thread in the fitting to direct the 45 degree elbow directly aft (away from the T-01233).

Step 4: Thread the FLF-00017 into the T-01232 as shown in Figure 1. When inserting, be sure the T-01233 passes through the snap bushing in the T-01228. This can be accomplished by lighting the inside of the tank with a flashlight and sighting down the inside of the T-01233 while inserting.

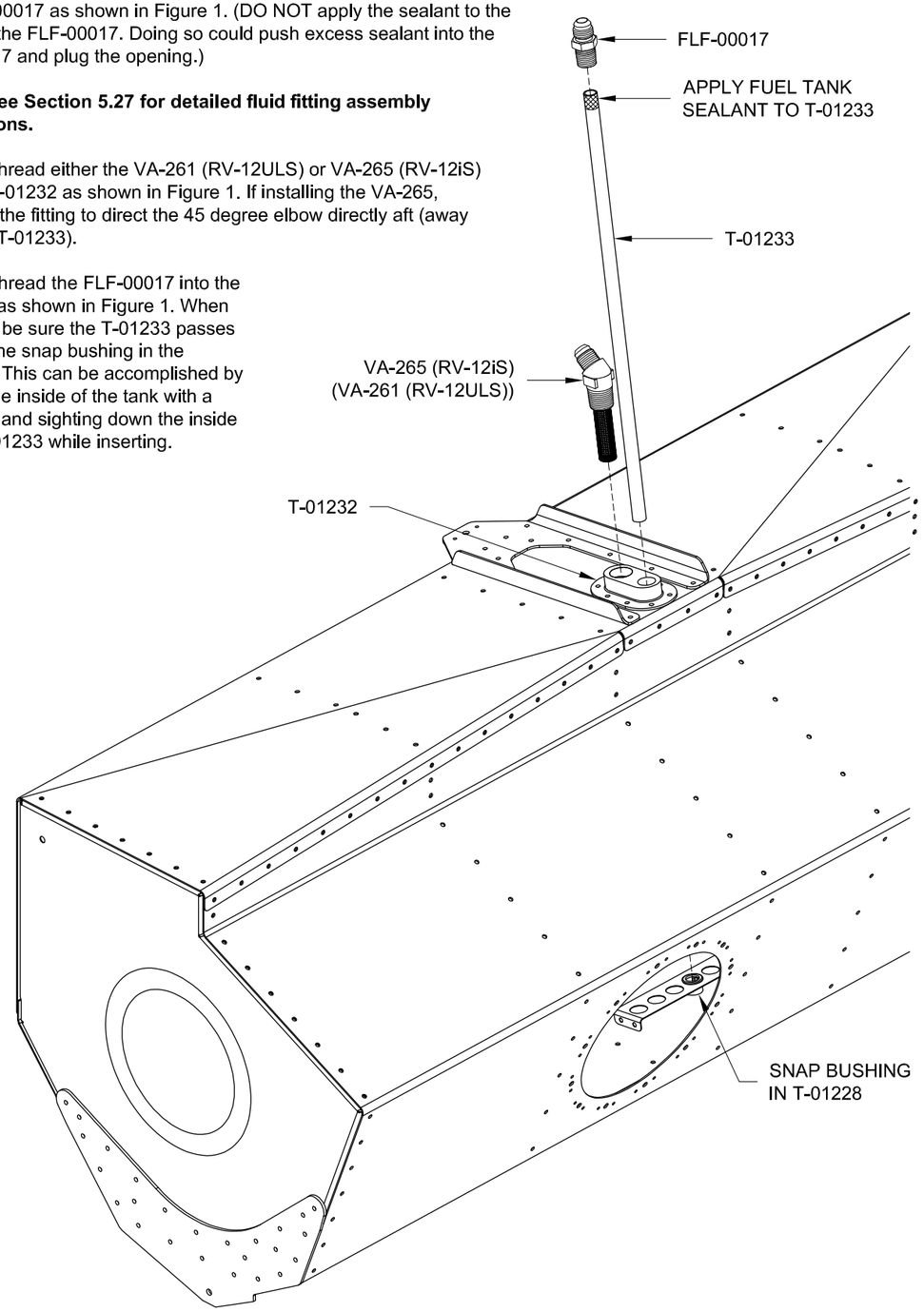

FIGURE 1: SUPPLY/RETURN FITTING INSTALLATION

NOTE: Apply sealant to the shanks of all screws that are installed in Figure 2.
Refer to Figure 2 for the remaining steps on this page.

Step 5: Apply a generous bead of sealant to the flange of the IE-00001X, then attach it to the tank as shown (the hole pattern will allow only a single attachment orientation). Make a fillet around the perimeter of the IE-00001X with the excess sealant that is squeezed out from between the mating parts.

Step 6: Apply a generous bead of sealant to the mating surface of the T-1209, then attach it to the tank. Make a fillet around the perimeter of the T-1209 with the excess sealant that is squeezed out.

Step 7: Apply a generous bead of sealant to the flange of the IE F-385B, then attach it to the T-1209 (when tightening the screws, make sure the ES-00313 is directed to the left as shown). Make a fillet around the perimeter of the IE F-385B with the excess sealant that is squeezed out.

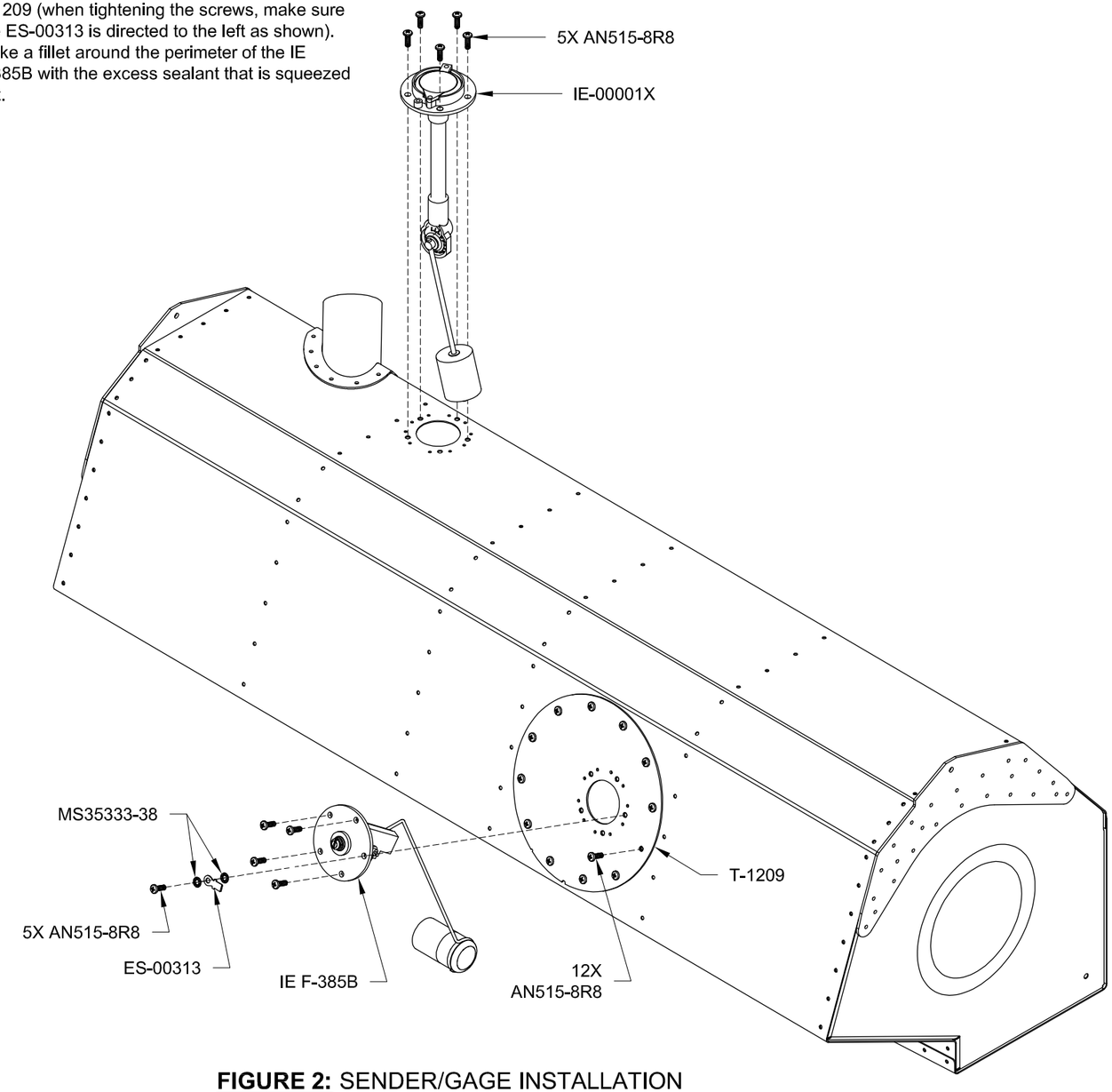

FIGURE 2: SENDER/GAGE INSTALLATION

CAUTION: The tank sealant must be fully cured before leak testing the Fuel Tank Assembly. Use less than 1 psi. DO NOT over pressurize the Fuel Tank Assembly.

Step 1: Cap the FLF-00017 with the flared fitting cap (supplied in the FUEL TANK TEST KIT) as shown in Figure 1.

NOTE: See Section 5.14 for information on cutting and flaring aluminum tubing.

Step 2: Flare the end of a roughly 3 in. [76.2 mm] length of ATO-035X3/8 tubing. With the fittings called out in Figure 1, attach the flared tube to either the VA-261 (RV-12ULS) or VA-265 (RV-12iS). Attach the air valve (supplied in the Fuel Tank Test Kit) to the tube using the hose clamps and hose called out in Figure 1.

Step 3: Slide a nitrile exam glove (or equivalent, roughly 5 mil thick) over the T-01229 and tape it in place to provide an air-tight seal.

Step 4: Follow the instructions provided with the Fuel Tank Test Kit to test the fuel tank for leaks. Repair any leaks, then re-test the fuel tank until no leaks are detected.

Step 5: Temporarily screw the F-01229A and F-01229-1 to the baggage floor in the four places shown in Figure 2.

Step 6: Using the hardware called out in Figure 2, bolt the fuel tank to the fuselage at the top two attachment points, and insert clecos in the aft four holes in the F-01229A.

Step 7: Ensure that the bottom of the fuel tank is seated fully down and forward, then match-drill #12 the screw hole in the F-01227 into the F-01229A and F-01229-1.

Step 8: Remove the F-01229-1 and F-01229A, match-drill the nutplate rivet holes into both parts, then deburr the holes.

Step 9: Machine countersink the F-01229A for the nutplate attach rivets, dimple the F-01229-1 and F-01229A for the other two flush rivets, then rivet the two parts and nutplate together.

NOTE: The tank will be in and out of the fuselage for the installation of the fuel system.

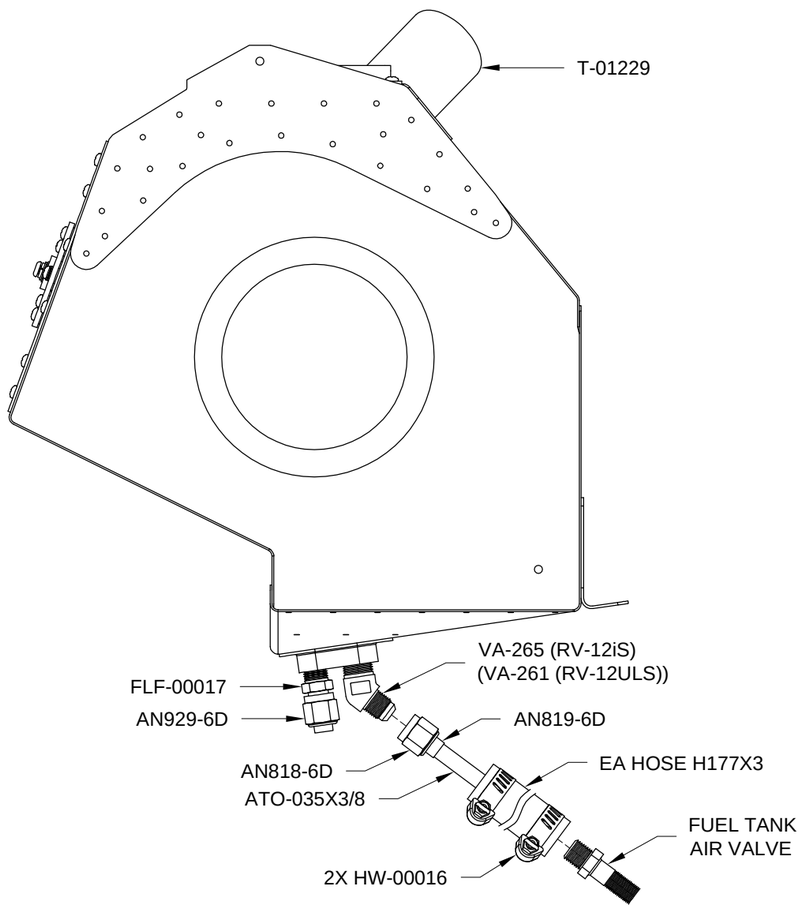

FIGURE 1: PRESSURE TESTING THE FUEL TANK

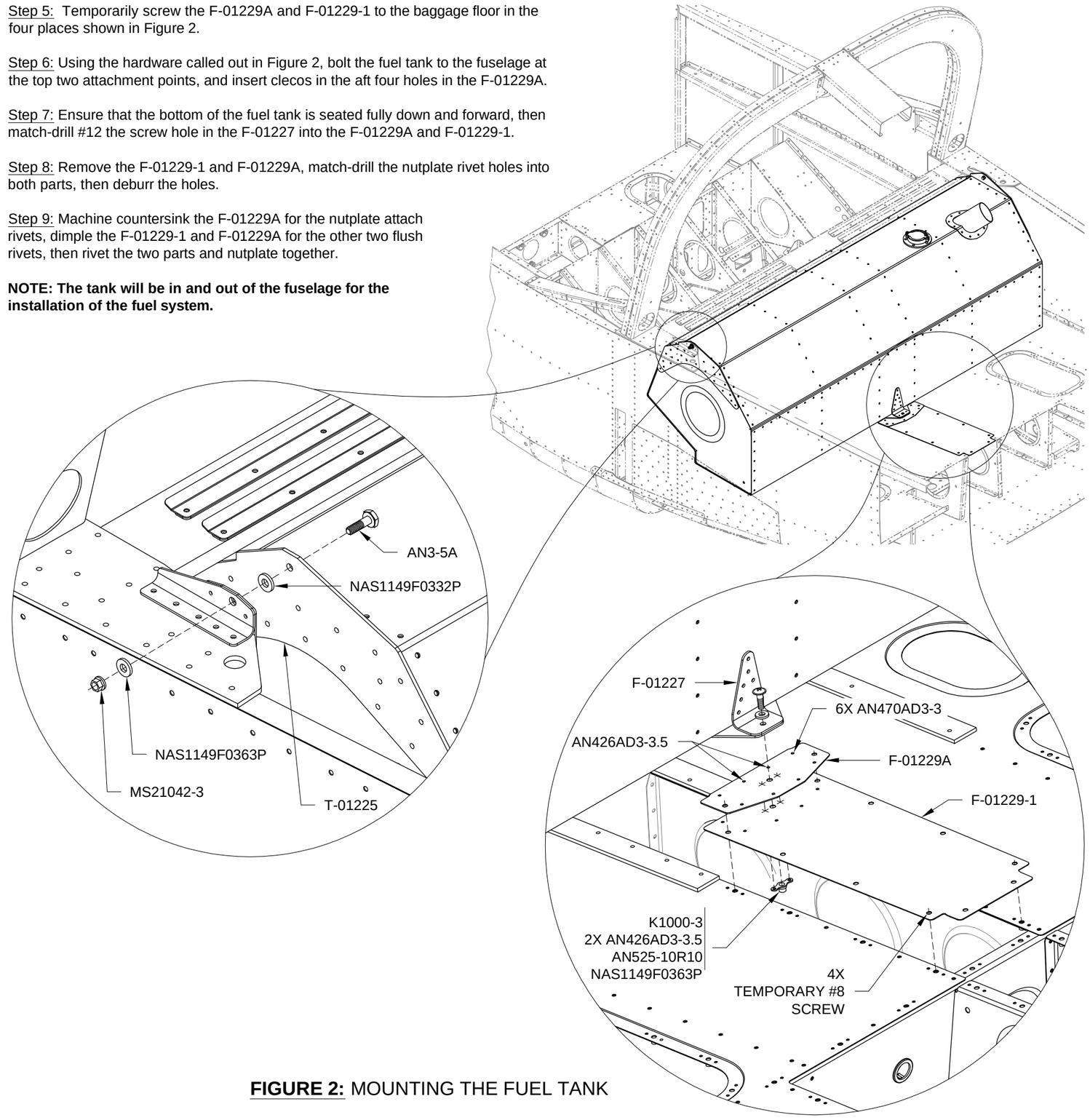

FIGURE 2: MOUNTING THE FUEL TANK